A4

REVISIONS				
ZONE	REV.	DESCRIPTION	DATE	APPROVED
	A0	Released	2023.9.19	Tim.Zhao

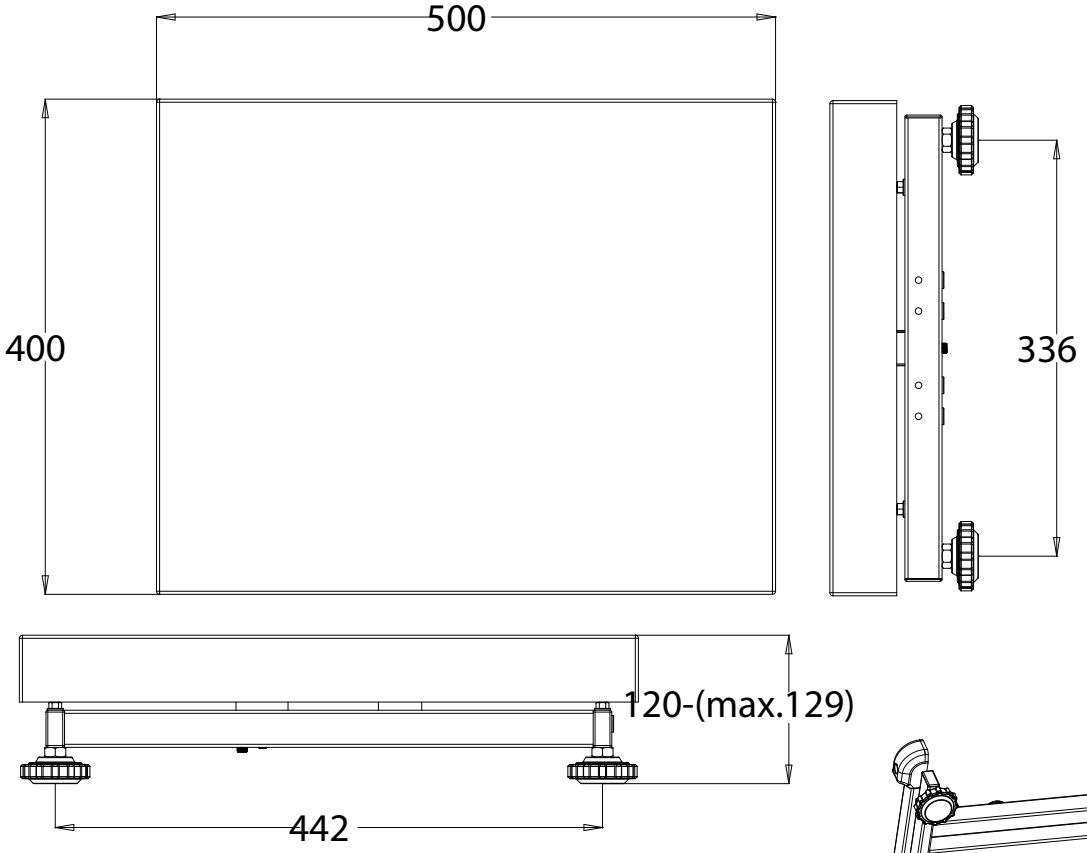

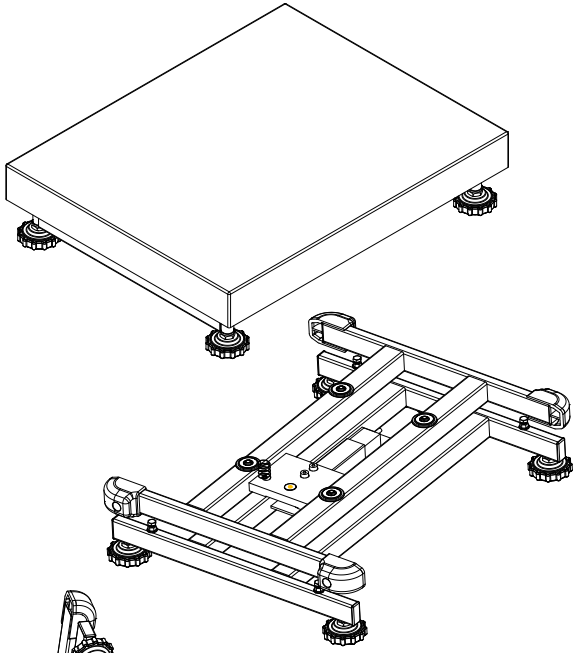

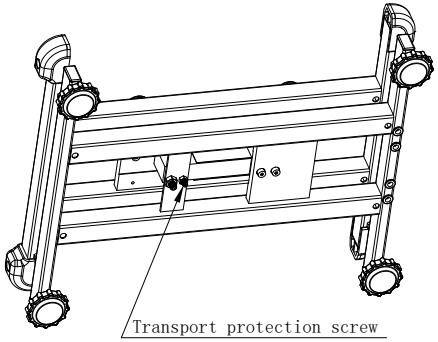

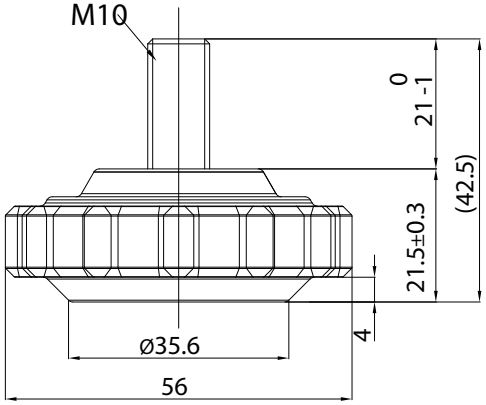

TOLERANCE UNLESS OTHERVISE SPECIFIED DEC ANGLES ±0.1 FOR 0.X ±0.5 ±0.05 FOR 0.XX		KERN® KERN & SOHN GmbH			
3RD ANGLE PROJECTION		TITLE:	TKFP 30V40LM-A with feet		
DRAWN	YJ.Zhao				
CHECKED	Tim.Zhao	MODEL NO.	SPB5040-30K-BM6G(SE) -KERN	PART NO.	130805800023
APPROVED	Tim.Zhao	MATERIAL		FINISH	
UNIT	mm	SCALE		DO NOT SCALE DRAWING	SHEET OF