KERN & Sohn GmbH
Ziegelei 1
D-72336 Balingen
E-Mail: info@kern-sohn.com
Phone: +49-[0]7433- 9933-0
Fax: +49-[0]7433-9933-149
Internet: www.kern-sohn.com

Operating manual
Electronic Crane Scales

Logbook
Regular maintenance and care

KERN HFC

Version 2.0
2026-10
GB

HFC-BA-e-2620

GB

KERN HFC

Version 2.0 2026-10

Operating instructions / logbook
Electronic Suspended balance

English

Contents

1. Technical data 4
1.1 Dimensions [mm] 6
1.2 Nameplate 9
1.3 EC-Declaration of -Conformity 10
2. General Safety Instructions 11
2.1 Duties of the owner-operator 11
2.2 Organizational measures 11
2.3 Environmental conditions 11
2.4 Pay attention to the instructions in the Operation Manual 12
2.5 Proper use 12
2.6 Improper Use 12
2.7 Warranty 12
2.8 Safe working 13
2.9 Monitoring of Test Resources 13
2.10 Testing upon acceptance 13
2.11 Initial Commissioning 13
2.12 Shutdown and storage 13
3. Appliance overview 14
3.1 Overview of display 15
3.2 Keyboard overview 16
3.3 Label 17
4. Commissioning 18
4.1 Unpacking 18
4.2 Scope of delivery 18
4.3 Checking the original dimensions 19
4.4 Battery / rechargeable battery operation 19
4.6 Suspending the balance 22
5. Operation 23
5.1 Safety instructions 23
5.2 Loading the suspended balance 24
5.3 Turn on/off 27
5.4 Set balance to zero 27
5.5 Taring 28
5.6 Weighing 28
5.7 Switch-over weighing unit 29

5.8 Hold weighing value (Data-HOLD function) 29
5.9 Peak value function 30
5.10 Weighing with tolerance range 30
5.11 Totalization 33
5.12 Gross / net invocation 34
5.13 Display background illumination 35
5.14 Automatic shutdown function 36
6. Menu 37
6.1 Navigation in the menu: 37
6.2 Overview: 38
7. Adjustment / linearization 40
7.1 Adjustment 40
7.2 Linearization 43
8. Cleaning, Repair, Maintenance and Disposal 45
8.1 Cleaning and Disposal 45
8.2 Regular maintenance and care 46
8.3 Checklist „regular maintenance“, (see chapter 8.2) 47
9. Enclosure 49
9.1 Checklist „Enhanced maintenance“ (General revision) 49

English

1. Technical data

KERN	HFC 600K-1	HFC 1T-4	HFC 3T-3
Readability (d)	0.2 kg	0.5 kg	1 kg
Weighing range (max)	600 kg	1000 kg	3000 kg
Taring range (subtractive)	599.8 kg	999.5 kg	2999 kg
Reproducibility	0.2 kg	0.5 kg	1 kg
Linearity	± 0,4 kg	± 1 kg	± 2 kg
Recommended adjustment weight, not added (class)	500 kg (M3)	1000 kg (M3)	3000 kg (M3)
Stabilization time	2 s		
Warm-up time	10 min		
Units	kg, lb, N		
Auto off	10 min		
Allowable ambient temperature	5…+35 °C		
Ambient humidity (max)	80 %		
Input Voltage	Power supply unit 100 – 240 V, 50 / 60 Hz		
	Device 9 V, 800 mA		
Battery	3 x 1.5 V AA		
	Service life (background illumination OFF) 40 h		
Rechargeable battery NiMH	Service life (background illumination OFF) 30 h		
	Loading time 12 h		
Display	Digit height 2.3 cm		
Housing material	Steel		
Net weight	2500 g		
Remote control (standard equipment)	Rechargeable battery NiMH, 7.2V, 1200mA Service life (background lighting on) 25 h Service life (background illumination OFF) 35 h Loading time 8 h		
Remote control Input Voltage	Mains adapter: 100 – 240 V, 50 / 60 Hz The appliance: 12 V, 500 mA		

English

KERN	HFC 5T-3	HFC 10T-3
Readability (d)	2 kg	5 kg
Weighing range (max)	5000 kg	10000 kg
Taring range (subtractive)	4998 kg	9995 kg
Reproducibility	2 kg	5 kg
Linearity	± 4 kg	± 10 kg
Recommended adjustment weight, not added (class)	3000 kg (M3)	10000 kg (M3)
Stabilization time	2 s	
Warm-up time	10 min	
Units	kg, lb, N	
Auto off	10 min	
Allowable ambient temperature	5…+35 °C	
Ambient humidity (max)	80 %	
Input Voltage	Power supply unit 100 – 240 V, 50 / 60 Hz	
	Device 9 V, 800 mA	
Battery	3 x 1.5 V AA	
	Service life (background illumination OFF) 40 h	
Rechargeable battery NiMH	Service life (background illumination OFF) 30 h	
	Loading time 12 h	
Display	Digit height 2.3 cm	
Housing material	Steel	
Net weight	4400 g	5500 g
Remote control (standard equipment)	Rechargeable battery NiMH, 7.2V, 1200mA Service life (background lighting on) 25 h Service life (background illumination OFF) 35 h Loading time 8 h	
Remote control Input Voltage	Mains adapter: 100 – 240 V, 50 / 60 Hz Appliance: 12 V, 500 mA	

English

1.1 Dimensions [mm]

Balance 0.6 t / 1 t

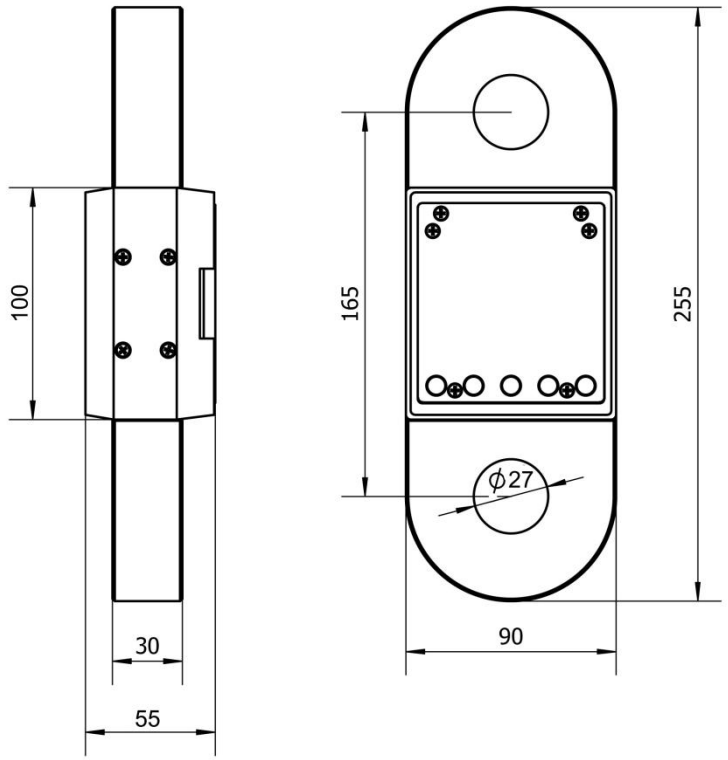

Balance 3 t

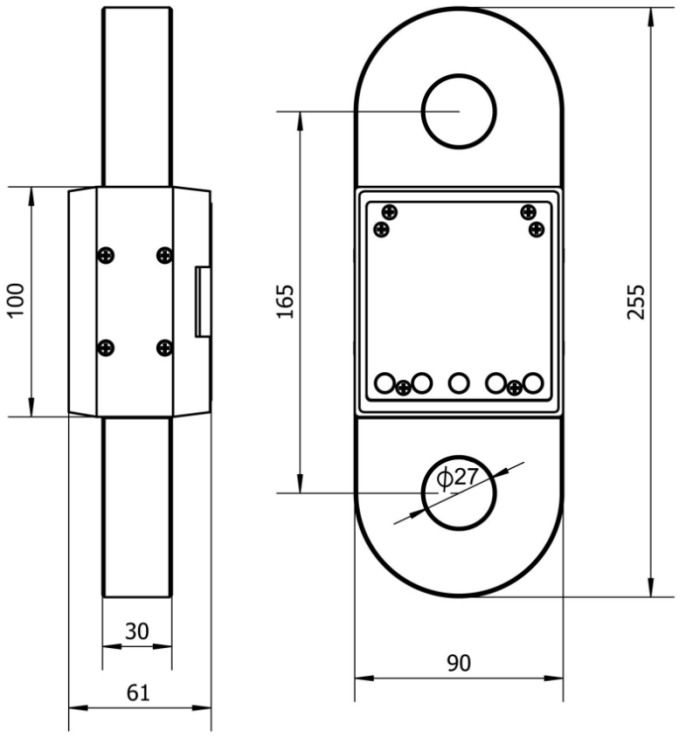

English

Balance 5 t

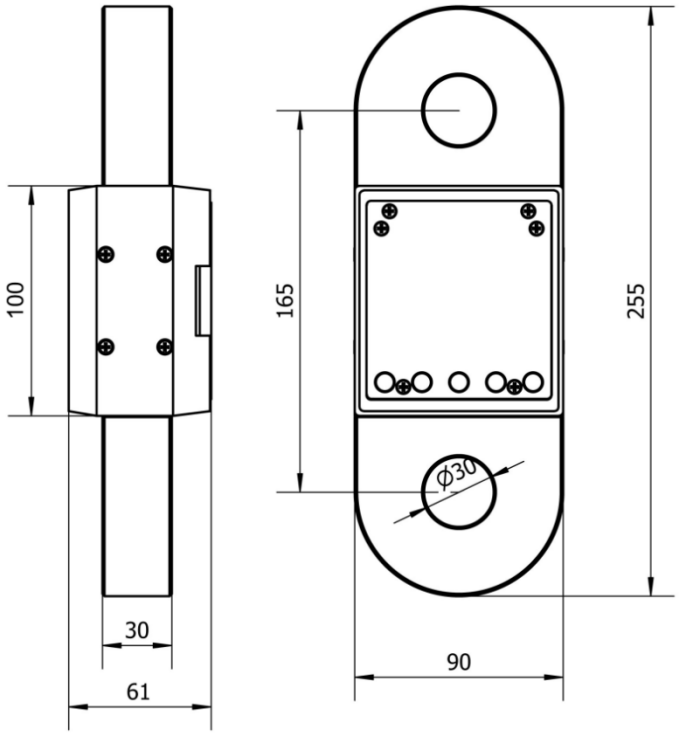

Balance 10 t

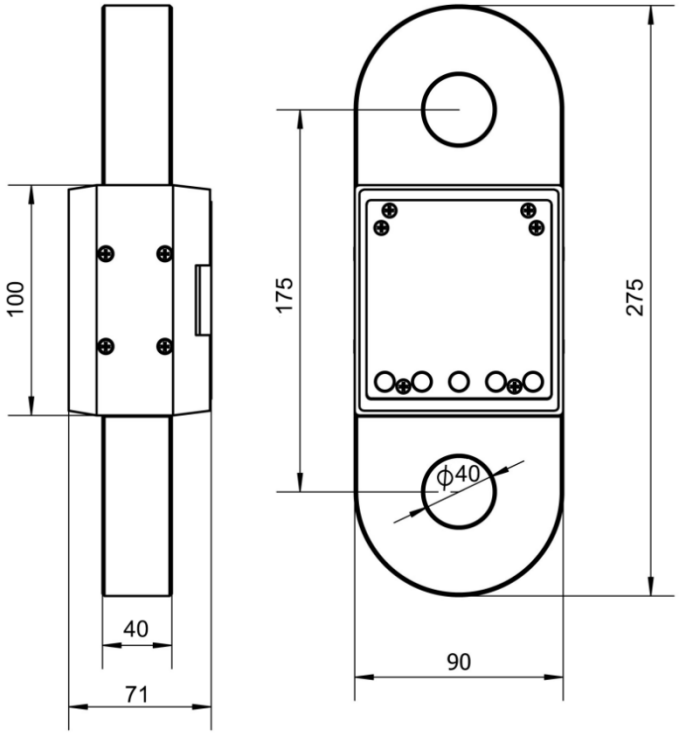

English

Holding strap terminal

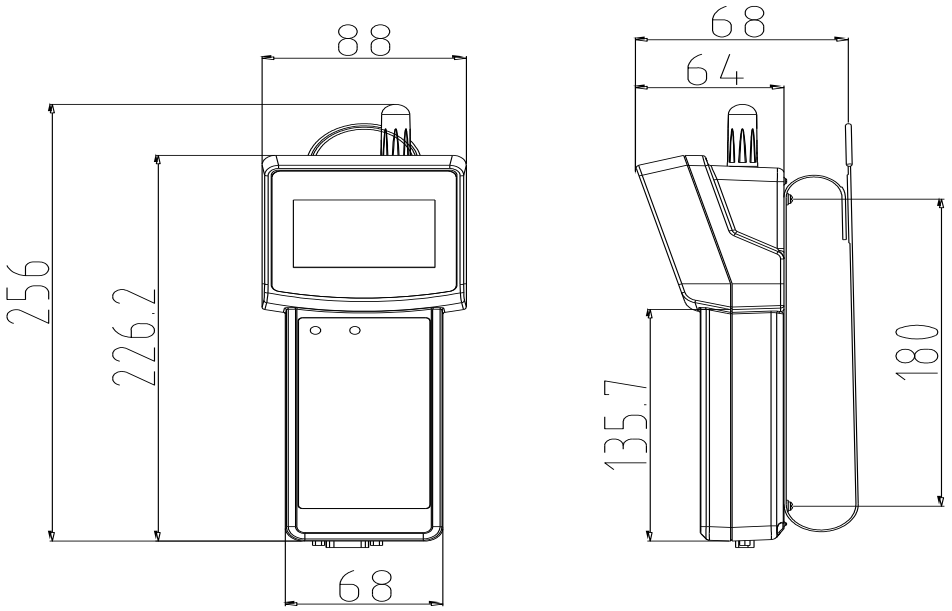

English

1.2 Nameplate

1	KERN Logo
2	Model designation
3	Weighing range [Max]
4	Data for power supply
5	Company address
6	Readability [d]
7	Date of manufacture
8	CE mark
9	Disposal symbol
0	Serial number

English

1.3 EC-Declaration of -Conformity

The current EC/EU Declaration of Conformity can be found online at:

www.kern-sohn.com/ce

English

2. General Safety Instructions

2.1 Duties of the owner-operator

Follow national accident prevention regulations and all operator health and safety at work and operating regulations.

- Observe all safety regulations of the crane manufacturer.
- The balance may only be used for the proposed purpose. Any type of use which is not specified in these operating instructions, will be considered as improper use. The customer is solely responsible for material damage and injury of persons resulting from an improper use, Messrs. KERN & Sohn will not be liable under any circumstance.
  Messrs . KERN & Sohn cannot be held liable, if the suspended balance is modified or used improperly and if damage is resulting from such use.
- Carry out service and repair to suspended balance (see chap. 8.3), crane and lifting tackle at regular intervals.
- Log the test result and keep it in the logbook.

2.2 Organizational measures

- Only trained and instructed staff may operate the balance.
- Make sure that the operating instructions are kept nearby the operation site of the suspended balance.
- Assembly, commissioning and maintenance should only be carried out by trained specialists.
- Weight-bearing components must not be replaced

2.3 Environmental conditions

- Never operate suspended balance in spaces exposed to explosion hazards. The serial version is not explosion protected.
- Operate the suspended balance only under environmental conditions as specified in these operating instructions (especially in chapter 1 „Technical data“).
- Do not expose the suspended balance to strong humidity. Non-permitted condensation (condensation of air humidity on the appliance) may occur if a cold appliance is taken to a considerably warmer environment. In this case, acclimatize the disconnected appliance for ca. 2 hours at room temperature.
- Do not use suspended balance in environments exposed to corrosion hazards.
- Protect the suspended balance against high humidity, vapours and dust.
- Major display deviations (incorrect weighing results) may be experienced should electromagnetic fields (e.g. due to mobile phones or radio equipment), static electricity accumulations or instable power supply occur. Change location or remove source of interference.

2.4 Pay attention to the instructions in the Operation Manual

⇨ Carefully read this operation manual before setup and commissioning, even if you are already familiar with KERN balances.

⇨ All language versions contain a non-binding translation. The original German is binding.

2.5 Proper use

The balance you purchased is intended to determine the weighing value of material to be weighed. It is intended to be used as a “non-automatic“ balance, i.e. the material to be weighed is suspended on the load receptor only vertically, manually, carefully and without jerks. As soon as a stable weighing value is reached the weighing value can be read.

- Use the suspended balance only for lifting and weighing of freely movable loads.
- Danger of injury due to improper use. Not allowed are e.g.:
  - Exceeding the allowed nominal load of crane, suspended balance or any type of load attachment devices
  - Conveying persons,
  - Pulling loads over an inclined surface,
  - Tearing-off, pulling or towing loads.
- Modifications or reconstructions of the suspended balance or of the crane are not allowed.

2.6 Improper Use

Do not use balance for dynamic weighing. In the event that small quantities are removed or added to the material to be weighed, incorrect weighing results can be displayed due to the “stability compensation“. (Example: Slowly draining fluids from a container suspended on the balance.) Do not leave permanent load suspended on the balance. This may damage the measuring system as well as safety-relevant parts.

The balance may only be used according to the described conditions. Other areas of use must be released by KERN in writing.

2.7 Warranty

Warranty claims shall be voided in case

- Our conditions in the operation manual are ignored
- The appliance is used outside the described uses
- The appliance is modified or opened
- Mechanical damage and damage caused by media, liquids,
- Natural wear and tear
- The appliance is improperly set up or incorrectly electrically connected
- The measuring system is overloaded

2.8 Safe working

- Do not stand under swinging loads, see chap. 5.1.
- Position the crane in a way that the load is lifted vertically.
- When working with the crane and suspended balance wear personal safety equipment (helmet, safety shoes etc.).

2.9 Monitoring of Test Resources

In the framework of quality assurance the measuring-related properties of the balance and, if applicable, the testing weight, must be checked regularly. The responsible user must define a suitable interval as well as type and scope of this test. Information is available on KERN's home page (www.kern-sohn.com) with regard to the monitoring of balance test substances and the test weights required for this. In KERN's accredited DKD calibration laboratory test weights and balances may be calibrated (return to the national standard) fast and at moderate cost.

2.10 Testing upon acceptance

Inspect packaging immediately upon receipt and inspect device when unpacking (see chap. 4.1.) in the event of any evident damage.

2.11 Initial Commissioning

In order to obtain exact results with the electronic balances, your balance must have reached the operating temperature (see warming up time chap. 1).
During this warming up time the balance must be connected to the power supply (mains, accumulator or battery).
The accuracy of the balance depends on the local acceleration of gravity.
Strictly observe hints in chapter Adjustment.
For checking original dimensions, s. chap. 4.3

2.12 Shutdown and storage

- Remove suspended balance from crane and remove all attachment devices from the suspended balance.
- Do not store suspended balance outdoors.

English

3. Appliance overview

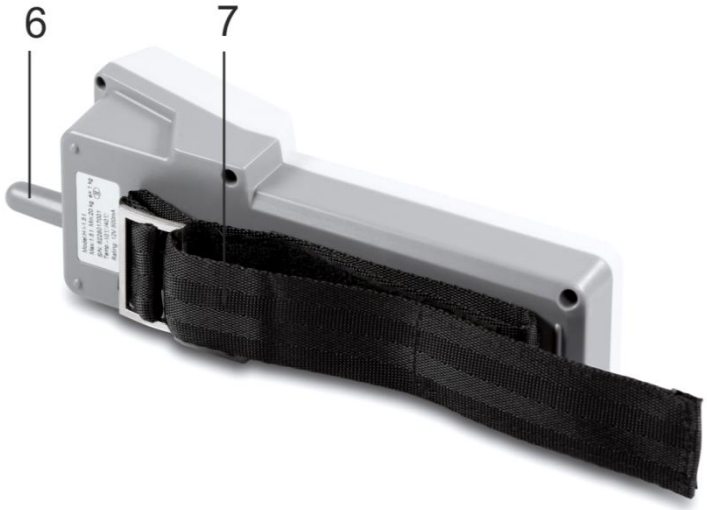

1	Anchor eyelet	5	Keyboard
2	ON/OFF switch	6	Antenna
3	Display	7	Hand loop
4	Battery charge status		

Lifting tackle not included in scope of delivery.

Standardised attachment devices are to be used to attach loads.

English

3.1 Overview of display

Display	Significance
	Rechargeable battery capacity
	Radio link display unit ⇔balance
HI OK LO	Indicators for weighing with tolerance range
M+	Totalization
STABLE	Stability display
ZERO	Zero indicator
Net	The displayed weighing value is a net weighing value
kg→→lb→N	Weighing Units

English

3.2 Keyboard overview

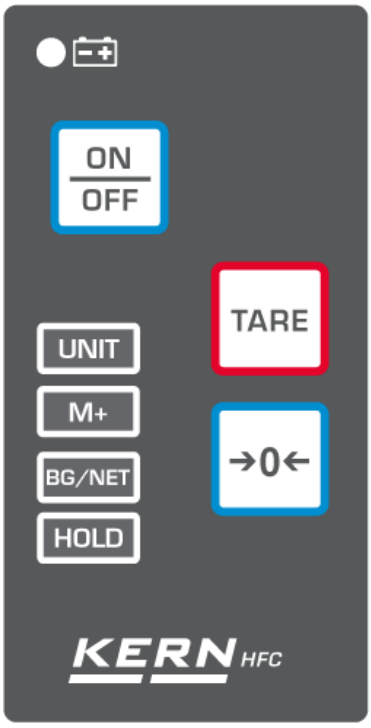

Button	Description of function
ON/OFF	• Turn on/off balance
TARE	• Taring • Scroll up/down menu • For numeric entry increase value of digit
→0←	• Zeroing • Confirm
UNIT	• Switch-over weighing unit • Exit menu / back to weighing mode.
M+	• Totalization • Select digits for numeric entry
BG/NET	• Change-over button between gross ⇆ and net weight • Delete total added memory • Delete on numeric entry
HOLD	• Fixing weight display see chap. 5.8 • Displaying peak load value see chap. 5.9

English

3.3 Label

- ⇨ Do not stand or go under suspended loads.
- ⇨ Do not use on building site.
- ⇨ Keep an eye on suspended loads.

(example)

- ⇨ Do not exceed nominal rated load of balance.

- ⇨ The product conforms to the requirements of the German Equipment and Product Safety Act.

English

4. Commissioning

⚠	**+ Always observe chapter 2 „General Safety Instructions“!**

4.1 Unpacking

SAFETY INSTRUCTIONS for protection against break	**Once delivered and unpacked, suspended balances will not be taken back.**
	⇨ The crane scales have been sealed by Messrs. KERN. ⇨ Removal from packaging is also sealed. **+ Broken seal obliges to purchase.** KERN Fig.: Seal
	Thanks for your comprehension. Your KERN Quality assurance team

4.2 Scope of delivery

Remove balance and accessories from packaging, remove packaging material. Verify that there has been no damage and that all packing items are present.

- Suspended balance, see chap. 3
- Holding strap terminal see chap. 3
- Rechargeable batteries (3 x 1.5V AA)
- Operating instructions / logbook

English

4.3 Checking the original dimensions

⇨ Enter the original dimensions shown on the production data sheet in the grey boxes of checklist chap. 8.3.

⇨ Check original dimension of suspended balance; for implementation see chap. 8.2 „Regular Maintenance“

⇨ Enter all data (date, tester, results) in the first line under „Inspection before first use“ in the checklist (see chapter 8.3)

CAUTION	If the dimensions of your first safety inspection do not match those of KERN, the balance must not be put into operation. In this case please contact a service partner authorised by Messrs. KERN.

4.4 Battery / rechargeable battery operation

Battery operation:

When batteries are empty, will appear on the balance’s display

Press ON/OFF and replace batteries.
Open battery compartment, replace batteries and close battery compartment again.

In order to save the battery, the balance switches automatically off after 4 minutes without weighing. This auto-off function can be deactivated in the menu, see chap. 6.

When the suspended balance is out of operation for a longer period, remove the batteries.

Unscrew battery / rechargeable battery compartment in the direction of the arrow.	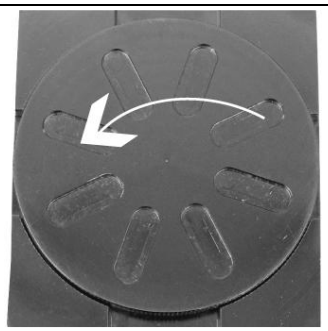
Replace batteries and relock battery / rechargeable battery compartment.	

English

Accu operation:

When the rechargeable battery is empty, appears on the balance's display. Turn off balance and connect power supply unit; battery is charged.

Once the battery has been fully charged the display will show the symbol.

Insert rechargeable battery:

Unscrew battery compartment in arrow direction.	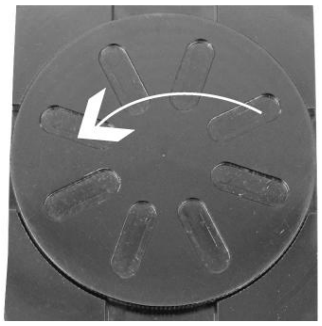
Remove batteries including battery mount from the device.	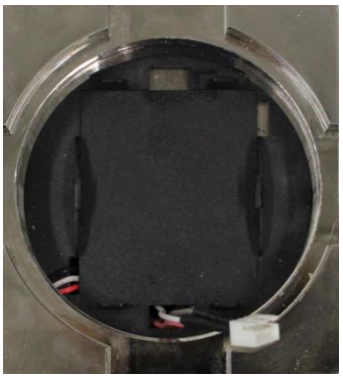

English

Connect cable of balance to battery cable as shown on image.	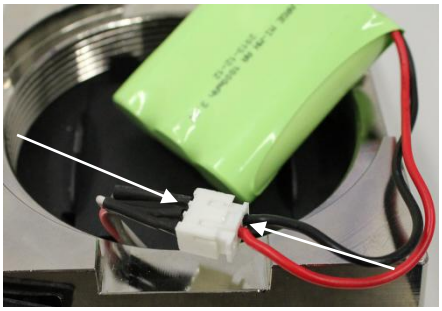
Insert battery in the centre. Ensure that the cables are not kinked. Relock battery compartment.	

English

4.6 Suspending the balance

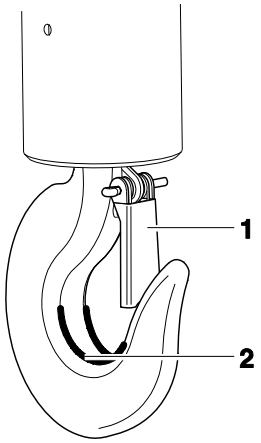

English

Condition
The crane needs a safety bracket (1) that the unloaded suspended balance cannot fall down.
If the safety bracket is missing or damaged, please contact the crane manufacturer in order to receive a hook with this safety equipment.

⇨ Suspend the suspended balance on the lower hook of a crane and close the safety bracket.
The crane scale's upper eyelet should rest in the saddle (2).

5. Operation

5.1 Safety instructions

	DANGER **Risk of injury due to falling loads!**
       (example)	⇨ Take great care when operating the crane and follow the general rules for crane operation. ⇨ Check all parts (hook, carbines, rings, rope slings, cables, chains etc.) for excessive wear or damage ⇨ If faults can be seen on the safety bracket of the crane hook or if it is missing completely, the scales must not be used. ⇨ Work only with appropriate speed ⇨ Always avoid vibrations and horizontal forces. Avoid any kind of shock, torsion and oscillating (e.g. caused by inclined suspending) ⇨ Do not use the suspended balance for conveying loads. ⇨ Do not stand or go under suspended loads. ⇨ Do not use on building site. ⇨ Keep an eye on suspended loads. ⇨ Do not exceed nominal rated load of crane, suspended balance or any kind of attachment device on the suspended balance. ⇨ For weighing dangerous goods (e.g molten masses, radioactive materials) the “Dangerous Goods Regulations” are to be regarded!

English

5.2 Loading the suspended balance

For good weighing results observe the following, illustrations see next page:

- ⇨ Only use load attachment devices which guarantee a one-spot suspension and where the scales can be suspended freely.
- ⇨ Do not use too large load attachment devices which do not guarantee any one-spot suspension.
- ⇨ Do not use multiple suspensions.
- ⇨ Do not pull or push the load or the loaded balance.
- ⇨ Do not pull the hook horizontally.

Loading the balance

1. Position the hook of the suspended balance over the load.
2. Move downwards the suspended balance until the load can be suspended on the hook of the balance. Reduce the speed when the respective height is going to be reached.
3. Attach load to attachment device. Ensure that all safety-relevant devices are functional (e.g. the safety latch is closed). If the load is fixed by slings, ensure that the slings rest completely on the saddle of the balance hook.
4. Lift-off the load slowly.

   When the load is fixed by slings, ensure that the load is well balanced on both sides and that the slings are correctly positioned.

+ **Always use suitable lifting tackles**

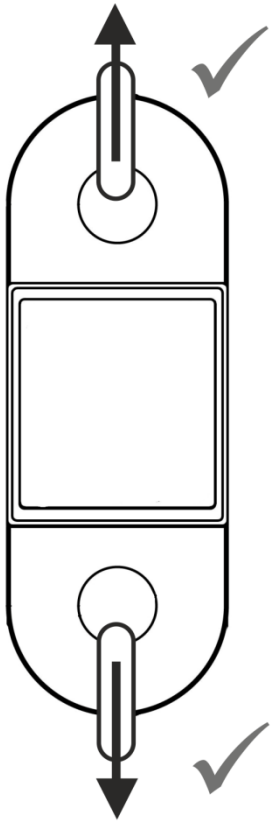

Only use attachment devices which guarantee a one-point suspension and where the balance can be suspended freely.

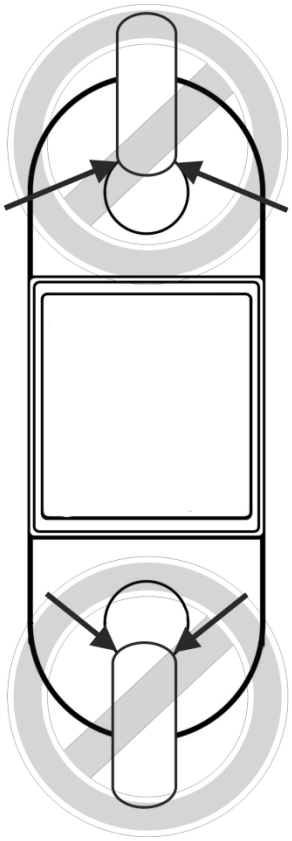

Do not use too large attachment devices which cannot guarantee a one-point suspension.

English

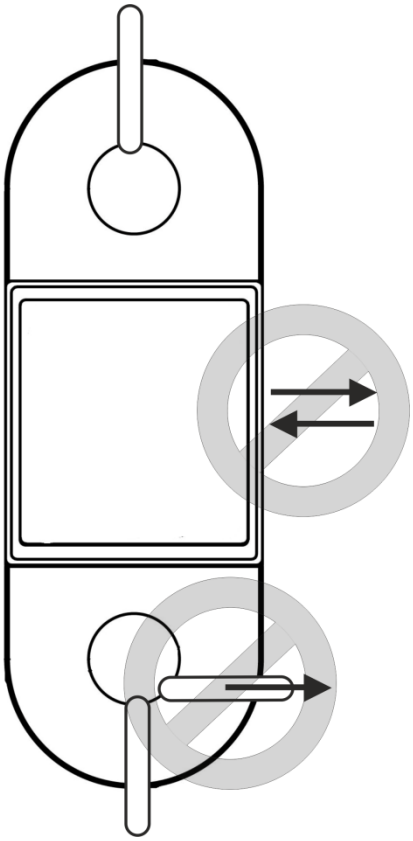

Do not push or pull

Do not pull the hook horizontally

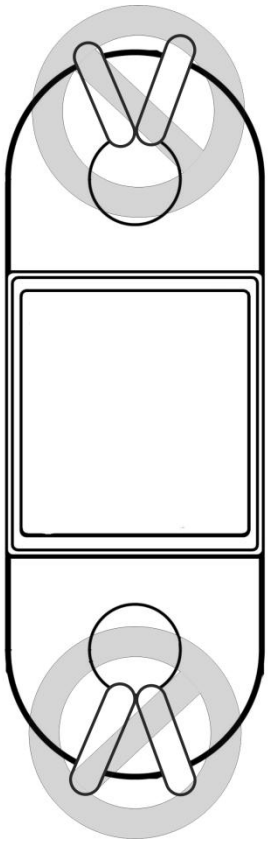

Do not use multiple suspensions

5.3 Turn on/off

Start-up

⇨ Press [ON/OFF] on the display unit; the unit will carry out a self-test. As soon as the weight display appears, the instrument will be ready to weigh.

⇨ Press [ON/OFF], too, on suspended balance.

⇨ If „Err 10“ appears in the weight display no radio communication with the balance could be established. Either the suspended balance is not yet switched on or the rechargeable battery has not been sufficiently loaded.

⇨ Use [ON/OFF] to turn on suspended balance or to load battery.

⇨ „Err 10“ disappears and the zero display will appear. The balance is now in weighing mode and ready for operation.

Switching Off

⇨ Press [ON/OFF] at the display unit, the display disappears.

5.4 Set balance to zero

In order to obtain optimal weighing results, reset to zero the balance before weighing.

Manual:

⇨ Unload the balance

⇨ Press [→0←], zero display as well as indicator **ZERO** will appear.

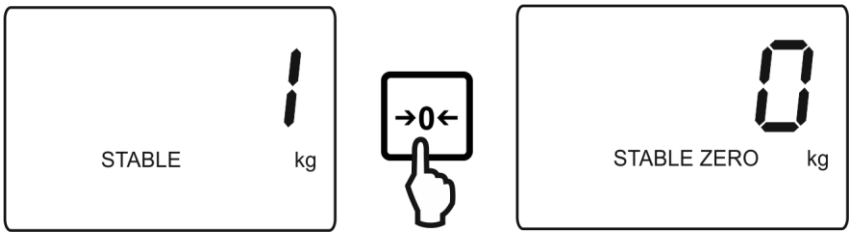

Resetting to zero is only possible when the displayed weight value is within the default zero setting range (See chap 6 “P1 ref→0rAnG“) and the balance is not moving, that is, the stability display “STABLE“ must be displayed.

Automatic:

Automatic zero tracking can be turned off in menu (See chap. 6 / function “P1 ref→0AUto“) or the range for zero tracking can be modified.
When this function is enabled, the zero point will be corrected automatically provided there is no load on the balance.

English

5.5 Taring

⇨ Attach initial load.

Press TARE, zero display appears. The weight of the container is now internally saved.

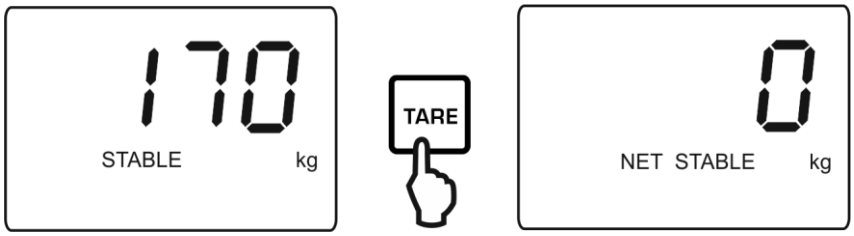

⇨ Weigh the material, the net weight will be indicated.

⇨ After removing the preload weight appears as negative display.

⇨ To delete the tare value, remove load from suspended balance and press TARE.

5.6 Weighing

⇨ Load the suspended balance.
The weight value will be displayed at once.

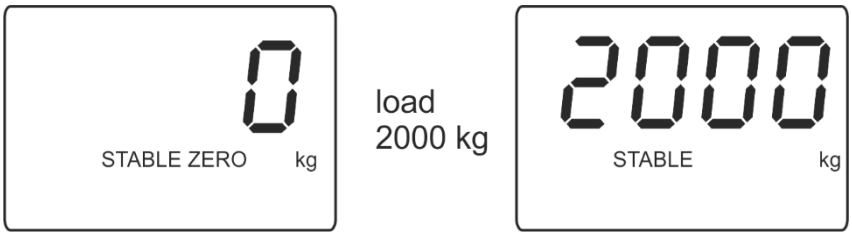

Overload warning

Overloading exceeding the stated maximum load (max) of the balance, minus a possibly existing tare load, must be strictly avoided. This could cause damage to the balance. Exceeding the maximum load is indicated by the display „ol“ . Unload balance or reduce preload.

English

5.7 Switch-over weighing unit

To switch over the weight value to the units enabled in the menu press the **UNIT**-key repeatedly (See chap. 6, “F2unt“).

Example, when in the menu all units are set to “on”:

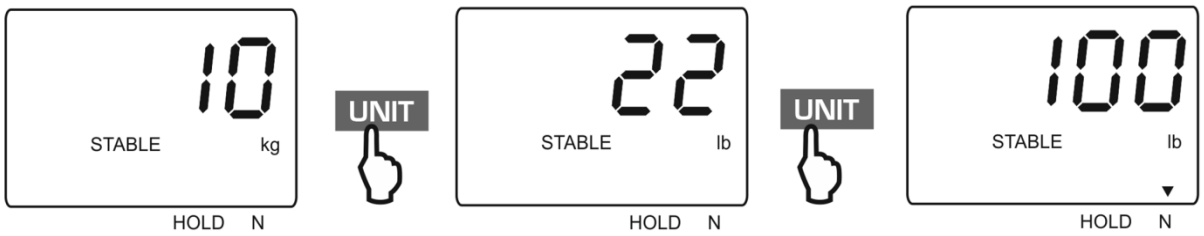

Every time the **UNIT**-key is pressed, the next weighing unit will be displayed.

kg→ lb→ N.

The indicator ▼ above N shows weight in Newton.

5.8 Hold weighing value (Data-HOLD function)

Once a stable weight value has been established, this can be fixed until deleted before the next weighing activity.

Menu setting “P4 HLd→HoLd“, see chap. 6

⇨ Suspend the material to be weighed
⇨ Press **HOLD**-key to fix the current weight value.
The indicator **HOLD** appears.

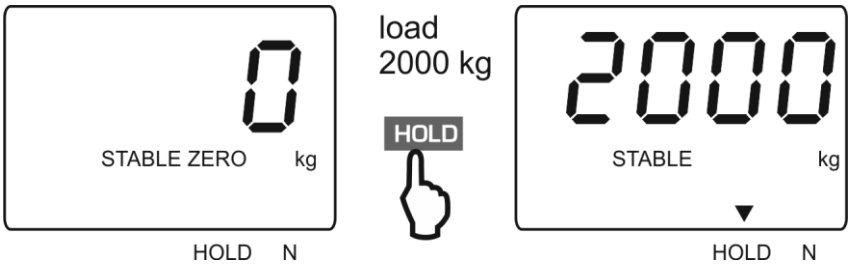

⇨ The weighing value will be held in the display until it is deleted by **HOLD**-key.

English

5.9 Peak value function

This function displays the highest load value (peak value) of a weighing.

Menu setting of “P4 HLd→PEAK“, see chap. 6

Attention:

Never exceed the maximum permitted load of the peak value on the balance (!!Danger of breaking!!).

⇨ Suspend the material to be weighed

⇨ To start the peak load measuring cycle, press **HOLD**-key, the heaviest load of the last weighing activity will be displayed.
The indicator ▼ appears above **HOLD**.

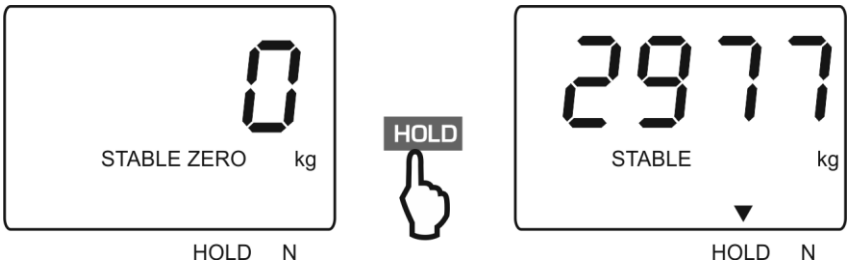

⇨ The peak load will be held on the display until deleted by pressing **HOLD**-key.

5.10 Weighing with tolerance range

To ensure that your weight value is within a defined tolerance range, you can define an upper and a lower limit value of your choice using function “F4 chk**“** (See chap. 6). During tolerance tests such as portioning or sorting the unit will indicate exceeded or undershot limits by emitting an optical or acoustic signal.

Audio signal:
The audio signal depends on the settings in menu “F0 off→beep“.
Options:

off	Audio signal turned off
ok	The audio signal will be sounded if the load is within the specified tolerance.
ng	The audio signal will be sounded if the load is outside the specified tolerance

English

Optical signal:
The optical signals provide the following information:

HI	Load exceeds specified tolerance
OK	Load within specified tolerance
LO	Load below specified tolerance

Setting audio signal / tolerance limits:

1. Switch-on balance and during the selftest press TARE.
   The first function „F0 oFF“ is displayed.
2. To confirm, press →0←, “bk“ will be displayed.
3. Select setting for “beeP“ by TARE.
4. Confirm by →0←, the current settings of the audio signal will be displayed.
5. Select the desired setting (off, ok, ng) by TARE and confirm by pressing →0← ,”bEEP“ will be displayed.
6. Press UNIT, the display will return to menu “F0 off“
7. Select function “F1H-L“ by TARE and confirm by pressing →0←. The display for entering the upper limit value „SETHi“ will appear.
8. Confirm by →0←, the enabled digit flashes.

   To change the selected (flashing) digit, press TARE repeatedly until the desired value is displayed. Then select further digits by M+ and amend them by TARE.
9. Confirm by →0←, “SETHi“ will be displayed.

English

10. Press TARE, the display for entering the lower limit value „SETLo“ appears.

11. Confirm by →0←, the enabled digit flashes.

12. Use TARE and M+ to enter lower limit; see step 8.

13. Confirm input by →0←, “SETLo“ will be displayed.

14. Press UNIT repeatedly to exit menu. From here evaluation takes place whether the goods to be weighed are within the two tolerance limits.

Start tolerance check: Tare when using a weighing container.

⇨ Put on goods to be weighed, tolerance control is started. The signal lights indicate whether the load is within the two set limits.
Depending on the setting in the menu an audio signal may be sounded.

English

Load below specified tolerance	Load within specified tolerance	Load exceeds specified tolerance
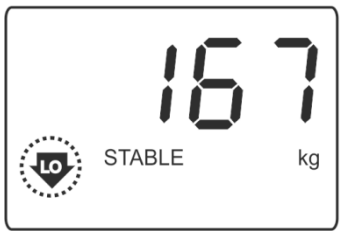		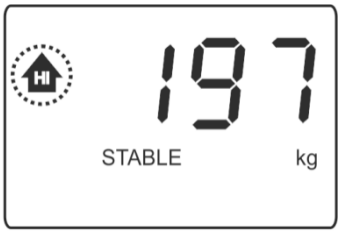
The indicator [LO] will appear	The indicator [OK] appears	The indicator [HI] appears

- The tolerance control is not active when the weight is under 20d.
- To delete limits, enter “0000 kg“.

5.11 Totalization

With this function the individual weighing values are totalized into the sum memory by pressing M+ .

Start adding-up procedure:

⇨ Hook-on the item to be weighed **A**.

Wait until the stability display "**STABLE**" appears, then press M+ . „**n001**" followed by the weight value will be displayed. The weighing value is added into the summation memory.

⇨ Remove the weighed good. More weighed goods can only be added when the display ≤ zero.

⇨ Suspend the item to be weighed **B**.

Wait until the stability display appears, then press M+ . The weighing value is added into the summation memory. The number of added-up items "n002", followed by the total weight will be displayed for approx. 3 sec. After that the current weighing value is displayed.

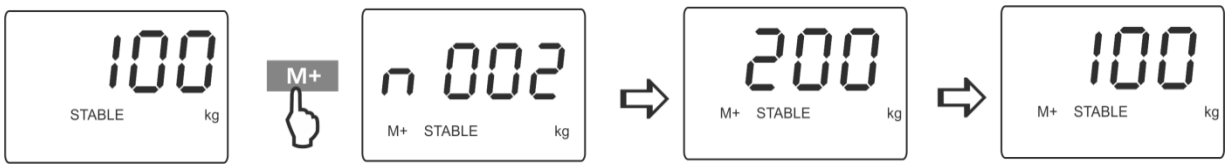

Add more weighed goods as described before.
Please note that the crane scales must be unloaded between the individual weighing procedures.
This process may be repeated 99 times or till such time as the capacity of the balance has been exhausted.

English

Display total number "Total":

When zero is displayed, press M+ and the number of added-up items, followed by the total weight will be displayed for 3 sec.

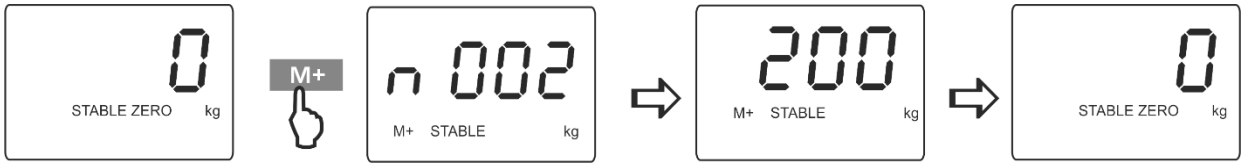

Delete accumulative memory:

When zero is displayed, press M+ and the number of added-up items, followed by the total weight will be displayed for 3 sec. During this display press BG/NET.
The data in the summation memory are deleted, the indicator „M+" extinguishes.

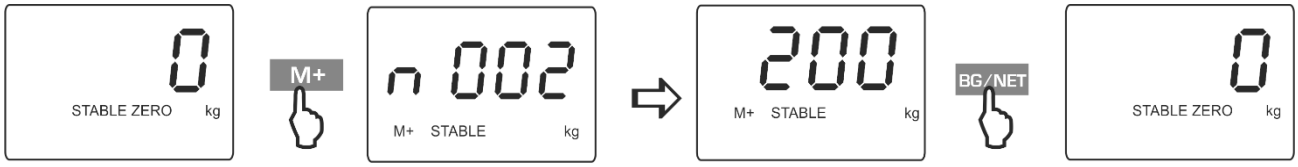

5.12 Gross / net invocation

By repeated pressing of BG/NET, change between gross and net display values.

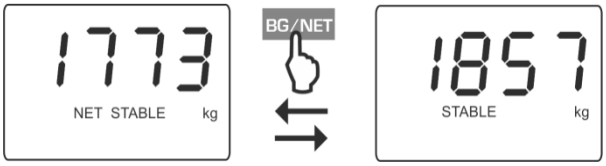

English

5.13 Display background illumination

⇨ Switch-on balance and during the selftest press [TARE]. “F0 off“ will be displayed.

⇨ Press [→0←], “bk“ will be displayed.

⇨ Press [→0←] again and the current setting for the background lighting of the display will be shown.

⇨ Press [TARE] to select the desired setting.

bk on	Continuous background lighting
bk of	Background illumination off
bk Auto	Automatic background illumination on when weighing pate is loaded or key pressed.

⇨ Save input by [→0←]

⇨ Back to weighing mode press [UNIT] several times.

English

5.14 Automatic shutdown function

The unit is automatically switched off within the preset time when the display unit or the weighing bridge are not operated.

⇨ Switch-on balance and during the selftest press [TARE]. “F0 off“ will be displayed.

⇨ Press [→0←], “bk“ will be displayed.

⇨ Press [TARE] repeatedly until the automatic switch-off function shows “oFF“.

⇨ Press [→0←], the current setting will be displayed.

⇨ Press [TARE] to select the desired setting.

English

off 0	Automatic switch-off function is disabled
off 3	Balance will be switched off 3 minutes later
off 5	Balance will be switched off 5 minutes later
off 15	Balance will be switched off 15 minutes later
off 30	Balance will be switched off 30 minutes later

⇨ Save input by [→0←]

⇨ Press back to weighing mode [UNIT] several times.

6. Menu

6.1 Navigation in the menu:

Call up menu	⇨ Switch-on balance and during the selftest press TARE. The first function „F0 off“ is displayed.
Select menu item	⇨ With help of TARE, the individual menu items can be selected one after the other.
Select setting	⇨ Confirm selected menu item by pressing →0←. The current setting will be displayed.
Change settings	⇨ Switch into the available settings using TARE.
Confirm setting	⇨ Press →0←, balance returns to menu
Exit menu / Return to weighing mode	⇨ Press UNIT repeatedly.

English

6.2 Overview:

Function	Available settings		Description
F0 oFF	**bk**	bk on	Background illumination on
		bk oF	Background illumination off
		bk AU	Background illumination switches on automatically when loaded or a button is pressed
	bEEP	oFF	Acoustic signal for weighing with tolerance range switched off
		ok	Audio sound when load is within tolerance limits
		nG	Audio sound when load is beyond tolerance limits
	oFF	0	Autom. shutdown disabled
		3/5/15/30	Autom. switch-off, options include 3, 5, 15, 30 minutes.
F1 H-L	**SEtHi**		Upper limit value “tolerance weighing “; input see chap. 5.10
	SEtLo		Lower limit “tolerance weighing”, input see chap. 5.10
F2 Unt	On / off **lb**		Set weighing unit to “on”, which you wish to switch-over to by UNIT in weighing mode; see chap. 5.7.
	On / off **N**		
F3 Com	Not documented		
F4 CH	CH 1 ↓ CH 8		Communication channel remote control
ProG **Pn**	Service menu Press →0←, when display shows “ProG“ and the password query “Pn“ will appear. Press TARE, M+, →0← one after the other and the first menu block “P1 rEF“ will be displayed.		

English

P1 rEF	**AZn**	off	Automatic zero correction (auto-zero) on change of display, Digit options include 0.5d, 2 d, 4 d..	Modifications may only be carried out by a specialist with competent knowledge. Adjustment or linearization is required after each configuration; see chap. 7.1 or 7.2.
		0.5 d		
		2 d		
		4 d		
	0AUto	P0	Load range where the display after switching-on the balance is automatically set to zero. Options include 0, 10, 20, 30, 50, 100 %	
		P10		
		P20		
		P50		
		P100		
	0rAnG	P0	Load range where the display is set to zero by pressing [→0←]. Options include 0, 2, 4, 10 , 20%.	
		P2		
		P4		
		P10		
		P20		
P2 CAL	**SiGrA** Single range scale	dESC	Position of the decimal dot	
		inC	Readability (d)	
		CAP	Capacity (max)	
		CAL	Adjustment procedure see chap. 7	
	dU rA Dual range scale	dESC	Position of the decimal dot	
		inC	div 1 Readability [d] 1. Weighing range	
			div2 Readability [d] 2. Weighing range	
		CAP	cap 1 Balance capacity [max] 1. Weighing range	
			cap 2 Balance capacity [max] 2. Weighing range	
		CAL	Adjustment procedure see chap. 7	
	dU in Multi-interval scale	dESC	Position of the decimal dot	
		inC	div 1 Readability [d] 1. Weighing range	
			div2 Readability [d] 2. Weighing range	
		CAP	cap 1 Balance capacity [max] 1. Weighing range	
			cap 2 Balance capacity [max] 2. Weighing range	
		CAL	commo Adjustment procedure see chap. 7.1	
			LinE0 Linearization procedure see chap. 7.2	
P3 inP	**12345**		Display internal resolution	
P 4 HLd	**Hold**		Data-HOLD function see chap. 5.8	
	PEAK		Peak value function see chap. 5.9	

English

7. Adjustment / linearization

7.1 Adjustment

As the acceleration value due to gravity is not the same at every location on earth, each balance must be coordinated - in compliance with the underlying physical weighing principle - to the existing acceleration due to gravity at its place of location (only if the balance has not already been adjusted to the location in the factory). This adjustment process must be carried out for the first commissioning, after each change of location as well as in case of fluctuating environment temperature. To receive accurate measuring values it is also recommended to adjust the balance periodically in weighing operation.

- Provide the required adjustment weight, see chap. 1. “Techn. data“.
  The weight to be used depends on the capacity of the scale. Carry out adjustment as near to maximum load as possible. Info about test weights can be found on the Internet at: http://www.kern-sohn.com
- Observe stable environmental conditions. A warming up time (see chapter 1) is required for stabilization.

English

Preparation:

⇨ Turn off balance and attach suitable lifting tackle.	
⇨ Turn on balance with the lifting tackle attached and press TARE during self-test. The first function „F0 off“ is displayed.	F0oFF
⇨ Press TARE repeatedly until „ProG“ will be displayed.	ProG
⇨ Press →0←, when display shows “ProG“ and the password query “Pn“ will appear.	Pn
⇨ Press subsequently TARE, M+, →0← and the first menu block “P1 rEF“ will be displayed.	P1rEF

⇨ Press [TARE] to call up “P2 CAL“.	P2CAL
⇨ Press [→0←] and select the set balances type by [TARE].	

SiGrA → Single-range balance

dU rA → Dual range balance

dU in → Multi-interval balance

⇨ Acknowledge by [→0←].	
⇨ Press [TARE] repeatedly until „CAL“ will be displayed.	CAL

⇨ Confirm by [→0←] and select required setting by [TARE]

Commo → Adjustment

LinE0 → Linearization

English

How to carry out adjustment:

⇨ Confirm adjustment function “Commo“ by [→0←].	Conno
⇨ “ULoAd“ will be displayed. Make sure that no loads apart from the lifting tackle are attached to the hook.	ULoAd
⇨ Wait for stability display, then press [→0←]. Either use the displayed adjustment weight or change by [TARE] and [M+], the currently enabled digit is flashing. To change the selected (flashing) digit, press [TARE] repeatedly until the desired value is displayed. Then select further digits by [M+] and amend them by [TARE].	1000.0 (example)
⇨ Confirm by [→0←], „LoAd“ will be shown. ⇨ Attach adjustment weight. Wait for stability display, then press [→0←].	LoAd
⇨ After successful adjustment „Pass“ will be displayed. Afterwards the balance will carry out a self-test. “Err19“ will appear briefly (Ignore error message), then the balance will change automatically into weighing mode and the total weight will be displayed. Adjustment has now been completed successfully.	PASS 1000.0 kg (example)

⇨ In case of an adjustment error or incorrect adjustment value the error message “fail“ will be displayed and you must repeat the adjustment procedure.

English

7.2 Linearization

Linearity shows the greatest deviation of a weight display on the scale to the value of the respective test weight according to plus and minus over the entire weighing range.
If linearity deviation is discovered during a monitoring of test resources, you can improve this by means of linearization.

- Carrying out linearization is restricted to specialist staff possessing well acquainted with the workings of balances.
- The test weights to be used must be adapted to the balance's specifications; see chapter 2.9 "Testing instruments control".
- Observe stable environmental conditions. Stabilisation requires a certain warm-up time.
- After successful linearization you will have to carry out calibration; see chapter 2.9 "Testing instruments control"

Preparation:
Call up linearization function "LinE0"; see chap. 7.1

How to carry out linearization:

⇨ Confirm „LinE0" by [→0←].	
⇨ "LoAd0" will be displayed. Make sure that no loads apart from the lifting tackle are attached to the hook.	LOAd0
⇨ Wait for stability display, then press [→0←]. As soon as "LoAd 1" is displayed attach first adjustment weight (1/3 max).	LOAd1
⇨ Wait for stability display „STABLE", then press [→0←]. As soon as "LoAd 2" is displayed attach second adjustment weight (2/3 max).	LOAd2

English

⇨ Wait for stability display „STABLE“, then press [→0←] . As soon as “LoAd 3“ is displayed attach third adjustment weight (max).	LOAd3
⇨ Wait for stability display, then press [→0←].	
⇨ After successful adjustment „Pass“ will be displayed. Afterwards the balance will carry out a self-test. “Err19“ will appear briefly (Ignore error message), then the balance will change automatically into weighing mode and the total weight will be displayed. Linearization has now been completed successfully.	PASS 10000.0 kg (example)

English

8. Cleaning, Repair, Maintenance and Disposal

⚠ **Danger**	**Risk of injury and risk of material damage!** **The suspended balance is part of the lifting gear!** **For a safe operation please observe the following:** ⇨ Have carried out a regular maintenance by trained specialized staff ⇨ Carry out regular maintenance and servicing, see chap. 8.2 ⇨ Have the parts exchanged only by trained specialized staff. ⇨ If there arose discrepancies with the safety checklist, the balance must not more be put into operation. ⇨ Do not repair the suspended balance yourself. Repair may only be carried out by service partners authorized by Messrs. KERN.

8.1 Cleaning and Disposal

⚠ **CAUTION**	**Damage to suspended balance!** ⇨ Do not use industrial solutions or chemicals (e.g. acid → embrittlement).

⇨ Clean the keyboard and the display with a soft cloth soaked in mild window cleaning agent.
⇨ Disposal of packaging and appliance must be carried out by operator according to valid national or regional law of the location where the appliance is used.

English

8.2 Regular maintenance and care

▲ The regular 3-month maintenance may only be carried out by an expert with competent knowledge of working with suspended balances. Thereby the national regulations for prevention of accidents as well as the working, operation and safety regulations of the owner-operator.

▲ To check the dimensions only use suitable test devices.

▲ The regular 12-month maintenance must only be carried out by trained specialized staff (KERN customer service).

▲ The results of the maintenance must be written down in the checklist (chap. 8.3).

▲ The additional results of the extended maintenance have to be entered in the checklist (chapter 9.1).

▲ The load suspension device is to be cleaned before inspection, see chap. 8.1.

English

Regular maintenance:

Prior to each usage	▪ Check for fault-free operation of the attachment devices
Initial start-up, every **3 months** or definitely after **12 500 weighing processes**	▪ Check all dimensions, see checklist chap. 8.3 ▪ Check the suspended balance and the used attachment device for wear and tear, such as e.g. plastic deformation, mechanical damage (unevenness), notches, striation, cracks, corrosion and torsions. ▪ Remove balance from use immediately if a reading exceeds the permitted deviation from the original reading (see checklist, chap. 8.3) or any other fault is identified.
Every **12 months** or in any case after **50 000 weighing processes**	▪ If the enhanced maintenance has to be carried out by trained staff (KERN customer service). At this general revision all load carrying parts must be checked for gaps with magnetic powder.
Every **10 years** or anyway after **500 000 weighing processes**	▪ Replace entire suspended balance

Note
For inspection of wear and tear please refer to the drawing (See chap. 8.3) below.

Rejection criteria: Load carrying devices may no longer be used when e.g.

+ Deviations during the tests defined for maintenance were discovered.
+ The type or load rating plate is missing.
+ Load suspension devices known to have been overloaded or subject to other harmful influences may no longer be used and/or may be re-used only after inspection.

8.3 Checklist „regular maintenance“, (see chapter 8.2)

Original dimensions suspended balance (You can find these data in the documentation enclosed with the balance. Please keep this document always available.	**Serial no. ……**
	Capacity ……
Lifting eyes clearance k [mm]	
Date ……	**Tester ……**

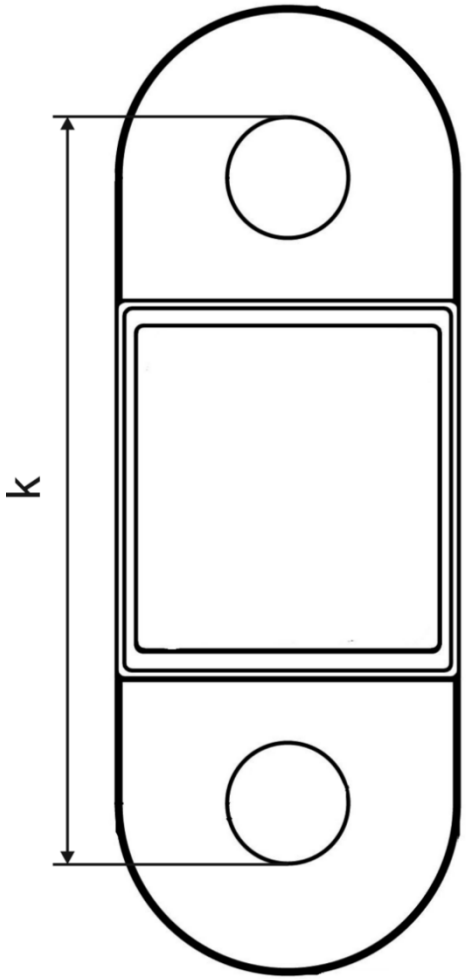

English

	Clearance k	Date	Tester
Max. admitted variation	1%		
Revision prior to first use			
3 months / 12,500 x			
6 months / 25,000 x			
9 months / 37,500 x			
12 months / 50,000 x			
15 months / 62,500 x			
18 months / 75,000 x			
21 months / 87,500 x			
24 months / 100,000 x			
27 months / 112,500 x			
30 months / 125,000 x			
33 months / 137,500 x			
36 months / 150,000 x			
39 months / 162,500 x			
21 months / 87,500 x			
42 months / 175,000 x			
45 months / 187,500 x			
48 months / 200 000			
51 months / 212,500 x			
54 months / 225,000 x			
57 months / 237,500 x			
60 months / 250 000x	➔ All load carrying parts have to be exchanged by a service partner authorised by KERN.		

bold letters = this maintenance work has to be carried out by a service partner authorized by KERN.

English

9. Enclosure

9.1 Checklist „Enhanced maintenance“ (General revision)

The enhanced maintenance has to be carried out by a service partner authorized by KERN.

Suspended balance	Model ……..……..			
	Serial no. …….……..			
Interval	Magnetic particle testing for cracks lifting eyes	Date	Name	Signature
12 months / 50,000 x				
24 months / 100,000 x				
36 months / 150,000 x				
48 months / 200,000 x				
60 months / 250,000 x				
72 months / 300,000 x				
84 months / 350,000 x				
96 months / 400,000 x				
108 months /450000 x				
120 months /500000 x	➔ Replace suspended balance completely			

English