KERN & Sohn GmbH
Ziegelei 1
D-72336 Balingen
E-Mail: info@kern-sohn.com
Phone: +49-[0]7433- 9933-0
Fax: +49-[0]7433-9933-149
Internet: www.kern-sohn.com

Operating manual
Stainless steel table scales

KERN FOB

Type FOB-S
Type FOB NS
Type TFOB-NL-A
Type TFOB-LM-A
Type TFOB-A

Version 2.3
2020-07
GB

FOB-BA-e-2023

GB

KERN FOB

Version 2.3 2020-07

Operating manual

Stainless steel table scales

English

Contents

1 Technical data ... 4

2 Declaration of conformity ... 10

3 Appliance overview ... 11

3.1 Components ... 11

3.2 Keyboard overview ... 13

3.3 Overview of display ... 15

4 Basic Information (General) ... 18

4.1 Proper use ... 18

4.2 Improper Use ... 18

4.3 Warranty ... 18

4.4 Monitoring of Test Resources ... 19

5 Basic Safety Precautions ... 19

5.1 Pay attention to the instructions in the Operation Manual ... 19

5.2 Personnel training ... 19

6 Transport and storage ... 19

6.1 Testing upon acceptance ... 19

6.2 Packaging / return transport ... 19

7 Unpacking, Setup and Commissioning ... 20

7.1 Installation Site, Location of Use ... 20

7.2 Unpacking ... 20

7.2.1 Placing ... 21

7.2.2 Levelling (FOB and FOB-LM models only) ... 21

7.2.3 Scope of delivery ... 21

7.3 Mains connection ... 21

7.3.1 Assembly or disassembly of the protection hood ... 22

7.4 Battery operation ... 23

7.5 Initial Commissioning ... 24

7.6 Adjustment ... 24

8 Verification (FOB-LM models only) ... 28

9 Operation ... 29

9.1 Simple weighing ... 29

9.2 Taring ... 30

9.3 Switch-over weighing unit ... 30

9.4 Hold function (FOB, FOB-NL/-LM/ models only)) ... 31

9.5 Display background illumination (FOB, FOB-NL/-LM/ models only) ... 31

9.6 Weighing with tolerance range (FOB, FOB-LM models only) ... 32

10 Menu ... 35

10.1 Call up menu ... 35

10.2 Navigation in the menu ... 35

10.3 Exit menu / return to weighing mode ... 35

10.4 Menu overview ... 36

10.4.1 Models FOB-S ... 36

10.4.2 Models FOB-NS ... 36

10.4.3 Models FOB-NL ... 37

10.4.4 Models FOB-LM ... 37

10.4.5 Models FOB ... 39

10.5 Menu settings ... 40

10.5.1 Setting weighing units 40
10.5.2 Automatic switch-off function „AUTO OFF“ in stand-by mode 42
11 Error reports 44
12 Servicing, maintenance, disposal 45
12.1 Cleaning 45
12.2 Servicing, maintenance 45
12.3 Disposal 45
13 Instant help 46

English

1 Technical data

KERN FOB-S, FOB-NS:

KERN	FOB 500-1S	FOB 5K1S
Readability (d)	0.1 g	1 g
Weighing range (max)	500 g	5000 g
Reproducibility	0.1g	1 g
Linearity	± 0.2 g	± 2 g
Weighing Units	g, lb, oz, dwt, ozt	
Recommended adjustment weight, not added (class)	500 g (M1)	5000 g (M1)
Warm-up time	10 min	
Stabilization time (typical)	2 sec.	
Operating temperature	+ 10° C .... + 40° C	
Humidity of air	25% - 95% (non-condensing)	
Housing stainless steel (B x D x H) mm	170 x 150 x 40	
Weighing plate, stainless steel (mm)	120 x 150	
Weight kg (net)	650 g	
Auto off	2 min	
Battery	9 V block	
	Service life 20 h	
Input voltage Appliance	9 V / 100 mA	
Input voltage Mains adapter	230 V / 50 Hz	

English

KERN	FOB 0.5K-4NS	FOB 5K-3NS
Readability (d)	0.1 g	1 g
Weighing range (max)	500 g	5000 g
Reproducibility	0.1g	1 g
Linearity	± 0.2 g	± 2 g
Weighing Units	g, lb, oz, ozt, dwt	
Recommended adjustment weight, not added (class)	500 g (M1)	5000 g (M1)
Warm-up time	10 min	
Stabilization time (typical)	2 sec.	
Operating temperature	+ 10° C .... + 35° C	
Humidity of air	25% - 95% (non-condensing)	
Housing stainless steel (B x D x H) mm	170 x 150 x 40	
Weighing plate, stainless steel (mm)	120 x 150 x 10	
Weight kg (net)	650 g	
Auto off	Options: 2, 3, 4, 5, min; off	
Battery	9 V block	
	Service life 24 h	
Input voltage Appliance	9 V / 100 mA	
Input voltage Mains adapter	230 V / 50 Hz	
IP protection	IP65	

English

FOB-NL:

KERN	FOB 3K-4NL	FOB 7K-4NL
Item no./ Type	**TFOB 3K-4NL-A**	
Readability (d)	0,2 g	0.5 g / 1 g
Weighing range (max)	3 kg	5 kg / 7.5 kg
Reproducibility	0.5 g / 1 g	0.5 g / 1 g
Linearity	± 0.6 g	± 1.5 g / 3 g
Recommended adjustment weight, not added (class)	3 kg (M1)	5 kg (M1)
Warm-up time	30 min	30 min
Weighing Units	g, lb, oz	g, lb, oz, ozt, dwt
Stabilization time (typical)	2 sec.	
Operating temperature	+ 5° C …. + 35° C	
Humidity of air	25% - 95% (non-condensing)	
Housing stainless steel (B x D x H) mm	285 x 255 x 90	
Weighing plate, stainless steel (mm)	252 x 200 x 14	
Weight kg (net)	3.8 kg	
Auto off	2 min	
Battery	4 x 1.5 V AA	
	Service life background illumination ON: 48 h	
	Service life background illumination OFF: 66 h	
Input voltage Appliance	12 V / 500 mA	
Input voltage Mains adapter	230 V / 50 Hz	
IP protection	IP67	

English

KERN	FOB 10K-3NL	FOB 30K-3NL
Readability (d)	1 g / 2 g	2 g / 5 g
Weighing range (max)	8 kg / 15 kg	16 kg / 30 kg
Reproducibility	1 g / 2 g	2 g / 5 g
Linearity	± 3 g / 6 g	± 6 g / 15 g
Recommended adjustment weight, not added (class)	10 kg (M1)	30 kg (M1)
Warm-up time	30 min	30 min
Weighing Units	g, lb, oz, ozt, dwt	
Stabilization time (typical)	2 sec.	
Operating temperature	+ 5° C …. + 35° C	
Humidity of air	25% - 95% (non-condensing)	
Housing stainless steel (B x D x H) mm	285 x 255 x 90	
Weighing plate, stainless steel (mm)	252 x 200 x 14	
Weight kg (net)	3.8 kg	
Auto off	2 min	
Battery	4 x 1.5 V AA	
Battery	4 x 1.5 V AA	
	Service life background illumination ON: 48 h	
	Service life background illumination OFF: 66 h	
Input voltage Appliance	12 V / 500 mA	
Input voltage Mains adapter	230 V / 50 Hz	
IP protection	IP67	

English

KERN FOB-LM:

KERN	FOB 1K-4LM	FOB 3K-3LM
Item no./ Type	**TFOB 1K-4LM-A**	**TFOB 3K-3LM-A**
Readability (d)	0.5 g	1 g
Weighing range (max)	1.5 kg	3 kg
Verification value (e)	0.5 g	1 g
Verification class	III	III
Minimum weight (min)	10 g	20 g
Reproducibility	0.5 g	1 g
Linearity	± 1.5 g	± 2 g
Recommended adjustment weight, not added (class)	1 kg (M1)	2 kg (M1)
Range for zero point adjustment (A/D converter value)	3000 - 120000	3000 - 120000
Range for adjustment with calibration weight (A/D converter value)	30000 – 50000	40000 – 65000
Warm-up time	10 min	10 min
Weighing unit	g	
Stabilization time (typical)	2 sec.	
Operating temperature	+ 5° C …. + 35° C	
Humidity of air	25% - 95% (non-condensing)	
Housing (B x D x H) mm	285 x 255 x 90	
Weighing plate, stainless steel (mm)	252 x 200 x 14	
Weight kg (net)	3.8 kg	
Auto off	2 min	
Battery	4 x 1.5 V AA	
	Service life background illumination ON: 48 h	
	Service life background illumination OFF: 66 h	
Input voltage Appliance	12 V / 500 mA	
Input voltage Mains adapter	230 V / 50 Hz	
IP protection	IP67	

English

KERN	FOB 6K-3LM	FOB 10K-3LM
Item no./ Type	**TFOB 6K-3LM -A**	**TFOB 10K-3LM-A**
Readability (d)	2 g	5 g
Weighing range (max)	6 kg	15 kg
Verification value (e)	2 g	5 g
Verification class	III	III
Minimum weight (min)	40 g	100 g
Reproducibility	2 g	5 g
Linearity	± 4 g	± 10 g
Recommended adjustment weight, not added (class)	5 kg (M1)	10 kg (M1)
Range for zero point adjustment (A/D converter value)	3000 - 120000	3000 - 10000
Range for adjustment with calibration weight (A/D converter value)	55000 – 80000	55000 – 80000
Warm-up time	10 min	10 min
Weighing unit	g	
Stabilization time (typical)	2 sec.	
Operating temperature	+ 5° C …. + 35° C	
Humidity of air	25% - 95% (non-condensing)	
Housing (B x D x H) mm	285 x 255 x 90	
Weighing plate, stainless steel (mm)	252 x 200 x 14	
Weight kg (net)	3.8 kg	
Auto off	2 min	
Battery	4 x 1.5 V AA	
	Service life background illumination ON: 48 h	
	Service life background illumination OFF: 66 h	
Input voltage Appliance	12 V / 500 mA	
Input voltage Mains adapter	230 V / 50 Hz	
IP protection	IP67	

English

KERN FOB:

KERN	FOB 1.5K0.5	FOB 3K1	FOB 6K2
Item no./ Type	**TFOB 1K-4-A**	**TFOB 3K-3-A**	**TFOB 6K-3-A**
Readability (d)	0.5 g	1 g	2 g
Weighing range (max)	1.5 kg	3 kg	6 kg
Reproducibility	0.5 g	1 g	2 g
Linearity	1.5 g	3 g	6 g
Recommended adjustment weight, not added (class)	1.5 kg (M1)	3 kg (M1)	6 kg (M1)
Warm-up time	10 min		
Weighing Units	g, lb, oz		
Stabilization time (typical)	2 sec.		
Operating temperature	+ 5° C …. + 35° C		
Humidity of air	25% - 95% (non-condensing)		
Housing (B x D x H) mm	235 x 175 x 62		
Weighing plate, stainless steel (mm)	175 x 165 x 7		
Weight kg (net)	1.8 kg		
Auto off	2 min		
Rechargeable battery	Standard		
Input voltage Appliance	12 V / 500 mA		
Input voltage Mains adapter	100V - 240 V, 50 Hz		

English

2 Declaration of conformity

The current EC/EU Conformity declaration can be found online in:

www.kern-sohn.com/ce

3 Appliance overview

3.1 Components

KERN FOB-S:

KERN FOB-NS:

KERN FOB-NL:

English

KERN FOB-LM:

KERN FOB:

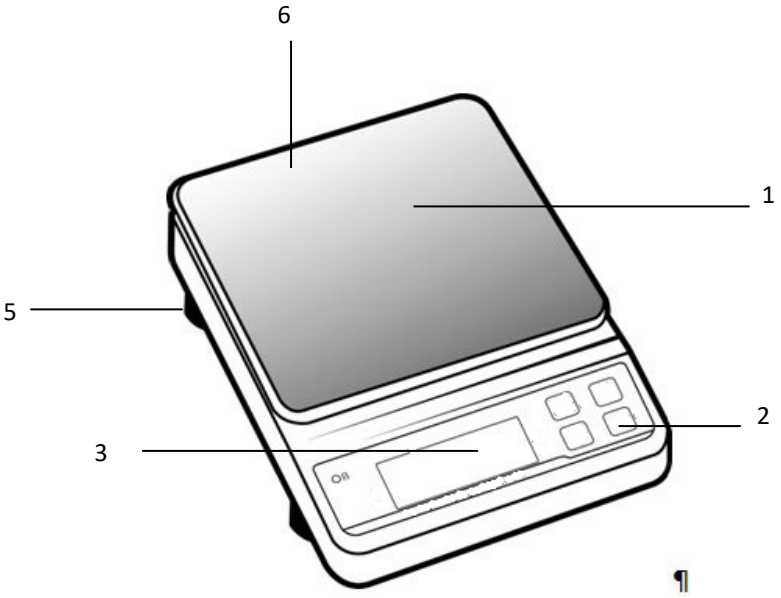

Pos.	Description
1	Weighing pan
2	Keyboard
3	Display
4	Rechargeable battery charge display
5	Levelling screw
6	Bubble level (below weighing pan)

3.2 Keyboard overview

Button	Description	Description
ON OFF	**ON/OFF**-button	• Turn on/off
TARE	**TARE**-key	• Taring • Zeroing
TARE →0←		
TARE		• Taring • Zeroing • Switching the display background illumination on/off (long key press)
→0← TARE		• Taring • Zeroing • Switching the display background illumination on/off (long key press)
UNIT	**UNIT-**button	• Switch-over weighing unit
HOLD TOL +/-	**HOLD** button	• Call up hold function • Calling up tolerance weighing (FOB models only)

Models FOB-S:

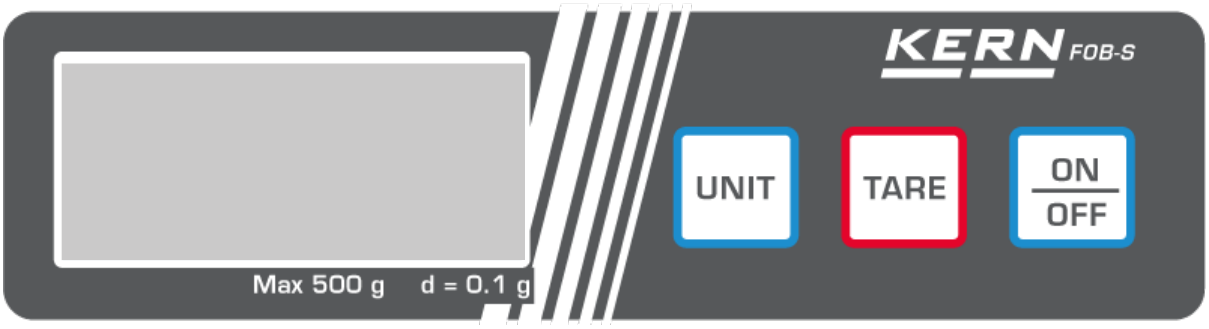

English

English

Models FOB-NS:

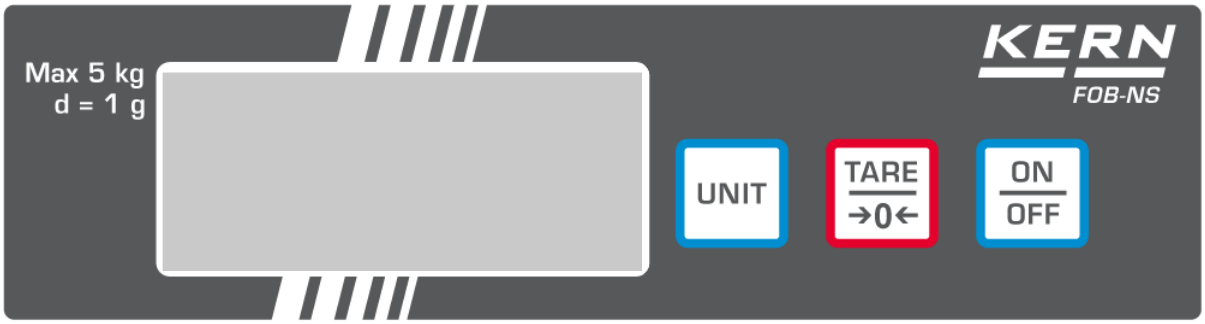

Models FOB-NL:

Models FOB-LM:

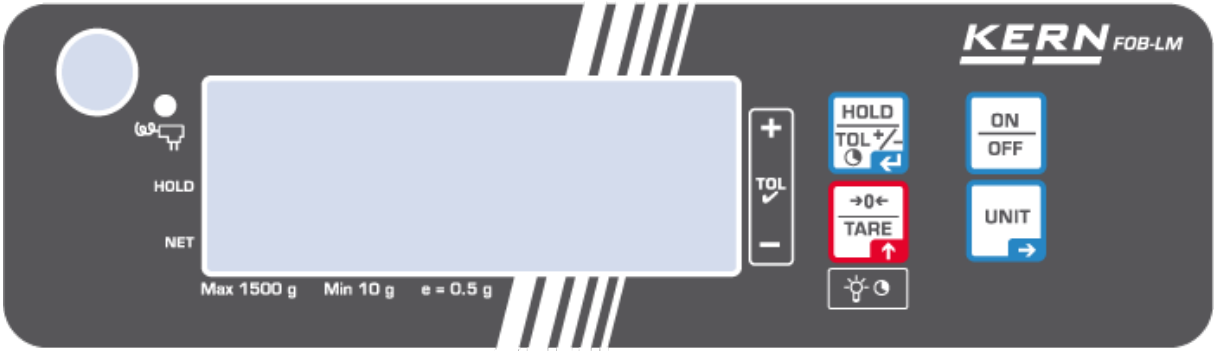

Models FOB:

3.3 Overview of display

Models FOB-S / FOB-NS:

Display	Description
g, lb, oz, ozt, dwt	Weighing units
o	Stability display

Models FOB-NL:

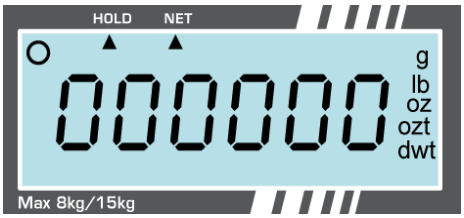

Display	Description
g, lb, oz, ozt, dwt	Weighing Units
o	Stability display
HOLD	Display hold function
NET	Display net weight

English

Models FOB-LM:

Display	Description
g	Weighing unit
O	Stability display
→0←	Zero display
	Battery charge display When the display LobAt shows that the battery capacity is exhausted, the balance will automatically switch off after 30 seconds. LED lights up when the power adapter is connected

The ▶ next to the icon is displayed when:

HOLD	the data-hold function is active
NET	the weight value is a net weight value
+ TOL ✓ −	the balance is in tolerance weighing mode

English

Models FOB:

Display	Description
g	Weighing unit
	Stability display
→0←	Zero display
	Rechargeable battery charge display
	Rechargeable battery charge display • LED lights green when the rechargeable battery is fully charged • LED flashes green when rechargeable battery is being charged

The ▶ next to the icon is displayed when:	
HOLD	the data-hold function is active
NET	the weight value is a net weight value
TOL	the balance is in tolerance weighing mode

English

4 Basic Information (General)

4.1 Proper use

The balance you purchased is intended to determine the weighing value of material to be weighed. It is intended to be used as a “non-automatic balance”, i.e. the material to be weighed is manually and carefully placed in the centre of the weighing pan. As soon as a stable weighing value is reached the weighing value can be read.

4.2 Improper Use

Do not use balance for dynamic weighing. In the event that small quantities are removed or added to the material to be weighed, incorrect weighing results can be displayed due to the “stability compensation“. (Example: Slowly draining fluids from a container on the balance.)
Do not leave permanent load on the weighing pan. This may damage the measuring system.
Impacts and overloading exceeding the stated maximum load (max) of the balance, minus a possibly existing tare load, must be strictly avoided. Balance may be damage by this.
Never operate balance in explosive environment. The serial version is not explosion protected.
The structure of the balance may not be modified. This may lead to incorrect weighing results, safety-related faults and destruction of the balance.
The balance may only be used according to the described conditions. Other areas of use must be released by KERN in writing.

English

4.3 Warranty

Warranty claims shall be voided in case

- Our conditions in the operation manual are ignored
- The appliance is used outside the described uses
- The appliance is modified or opened
- Mechanical damage and damage caused by media, liquids,

  Natural wear and tear
- The appliance is improperly set up or incorrectly electrically connected
- The measuring system is overloaded

4.4 Monitoring of Test Resources

In the framework of quality assurance the measuring-related properties of the balance and, if applicable, the testing weight, must be checked regularly. The responsible user must define a suitable interval as well as type and scope of this test. Information is available on KERN's home page (www.kern-sohn.com with regard to the monitoring of balance test substances and the test weights required for this. In KERN's accredited DKD calibration laboratory test weights and balances may be calibrated (return to the national standard) fast and at moderate cost.

5 Basic Safety Precautions

5.1 Pay attention to the instructions in the Operation Manual

Carefully read this operation manual before setup and commissioning, even if you are already familiar with KERN balances.

5.2 Personnel training

The appliance may only be operated and maintained by trained personnel.

6 Transport and storage

6.1 Testing upon acceptance

When receiving the appliance, please check packaging immediately, and the appliance itself when unpacking for possible visible damage.

6.2 Packaging / return transport

- ⇨ Keep all parts of the original packaging for a possibly required return.
- ⇨ Only use original packaging for returning.
- ⇨ Prior to dispatch disconnect all cables and remove loose/mobile parts.
- ⇨ Reattach possibly supplied transport securing devices.
- ⇨ Secure all parts such as the glass wind screen, the weighing platform, power unit etc. against shifting and damage.

English

7 Unpacking, Setup and Commissioning

7.1 Installation Site, Location of Use

The balances are designed in a way that reliable weighing results are achieved in common conditions of use.
You will work accurately and fast, if you select the right location for your balance.

Therefore, observe the following for the installation site:

- Place the balance on a firm, level surface;
- Avoid extreme heat as well as temperature fluctuation caused by installing next to a radiator or in the direct sunlight;
- Protect the balance against direct draughts due to open windows and doors;
- Avoid jarring during weighing;
- Protect the balance against high humidity, vapours and dust;
- Do not expose the device to extreme dampness for longer periods of time. Non-permitted condensation (condensation of air humidity on the appliance) may occur if a cold appliance is taken to a considerably warmer environment. In this case, acclimatize the disconnected appliance for ca. 2 hours at room temperature.
- Avoid static charge of weighed items or weighing container.

Major display deviations (incorrect weighing results) may be experienced should electromagnetic fields (e.g. due to mobile phones or radio equipment), static electricity accumulations or instable power supply occur. Change location or remove source of interference.

7.2 Unpacking

Carefully remove the weighing balance from the packaging and install it at the designated work place.

7.2.1 Placing

The balance must be installed in a way that the weighing plate is exactly in horizontal position.

7.2.2 Levelling (FOB and FOB-LM models only)

Level balance with foot screws until the air bubble of the water balance is in the prescribed circle.

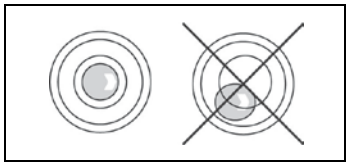

Check levelling regularly.

7.2.3 Scope of delivery

Serial accessories:

- Balance
- Weighing pan
- Mains adapter (option KERN FOB-A01, all models except models FOB)
- Mains adapter (standard, FOB models only)
- Battery (all models except FOB models)
- Rechargeable battery (standard, FOB models only)
- Protective cover
- Operating manual

7.3 Mains connection

The balance may be operated via the optional mains adapter. The stated voltage value must be the same as the local voltage. Only use original KERN mains adapters. Using other makes requires consent by KERN.

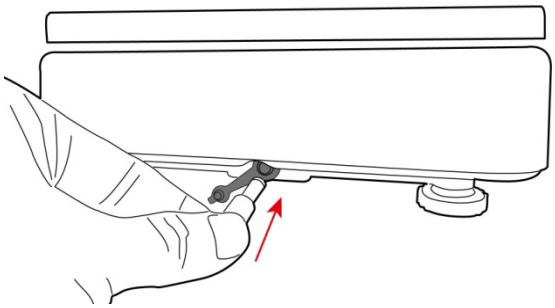 Illustration example KERN FOB-LM	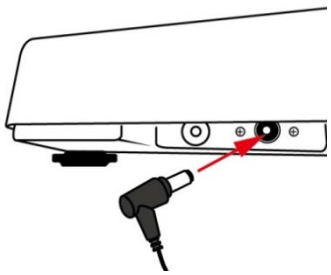 Illustration example KERN FOB

English

7.3.1 Assembly or disassembly of the protection hood
Models FOB-S, FOB-NS, FOB-NL, FOB

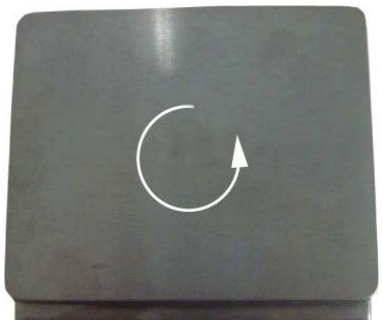	⇨ Unlock weighing pan in the direction of the arrow
	⇨ Remove or replace the protection hood

Models FOB-LM:

	Fasten the weighing plate support on the balance with the help of the three delivered screws. After that attach the weighing plate.

English

7.4 Battery operation

Remove battery cover at the lower side of the housing. Insert Battery, see. Chap. 1 "Technical Data".
Put battery cover back in place and tighten it.

Illustration example:

FOB-NS	FOB-NL, FOB-LM
	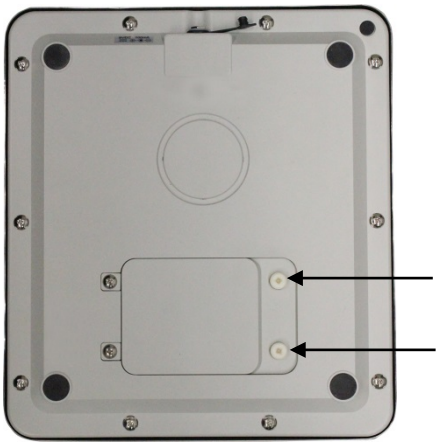

When you tighten the battery cover, make sure that not too much pressure is put on the weighing plate. The load cell may be damaged.

In the menu you can activate the AUTO-OFF function (see chap. 10.5.2 “Automatic switch-off function“). According to the selected settings, the balance switches automatically off in order to spare the battery.
The empty battery is indicated on the display by „**LobAt“**. Press **ON/OFF**-key and replace the battery/ies immediately.
If the balance is not used for a longer time, take out the battery/ies and store it/them separately. Leaking battery liquid could damage the balance.

English

7.5 Initial Commissioning

In order to obtain exact results with the electronic balances, your balance must have reached the operating temperature (see warming up time chap. 1). During this warming up time the balance must be connected to the power supply (mains or battery).
The accuracy of the balance depends on the local acceleration of gravity.
Strictly observe hints in chapter Adjustment.

7.6 Adjustment

As the acceleration value due to gravity is not the same at every location on earth, each balance must be coordinated - in compliance with the underlying physical weighing principle - to the existing acceleration due to gravity at its place of location (only if the balance has not already been adjusted to the location in the factory). This adjustment process must be carried out for the first commissioning, after each change of location as well as in case of fluctuating environment temperature. To receive accurate measuring values it is also recommended to adjust the balance periodically in weighing operation.

The adjustment should be made with the recommended adjustment weights (see chap. 1 "Technical data").

Procedure when adjusting:

Observe stable environmental conditions.

A warming up time (see chapter 1; Technical Data) is required for stabilization.

Ensure that there are no objects on the weighing plate.

English

Models FOB-S, FOB-NS, FOB-NL, FOB::

Balance display	Operation
888888 ò 137105 (example)	• Switch off the balance • Hold down the **ON/OFF** key, simultaneously press the **UNIT** key 3 times, release the **ON/OFF** key - an internal numerical value is displayed.
0 CAL ò 5000 g (example) 0	⇨ Press the **TARE** key, "0" is displayed ⇨ Put adjustment weight centrically on the weighing plate and press the **TARE**-key, "CAL" is displayed, followed by the value of the put adjustment weight. ⇨ Take away adjustment weight ⇨ The balance changes into weighing mode. ⇨ Adjustment has now been completed successfully.

English

Models FOB-LM:

i	• For balances which need to be verified, the calibration function is blocked. • Following each calibration, the integrated counter value (<Con x>) is increased by one. • If the service menu is brought up after the password has been entered, the verification is lost, as the value of the integrated counter (<Con x>) is increased by ‘1’.

Calibration procedure:

i	• If the calibration menu is brought up after the password has been entered, the verification is lost, as the value of the integrated counter (<Con x>) is increased by ‘1’.

English

Balance indication	Operation
0000 9810	Switch the balance off. Press the **ON/OFF** button and hold it down. When the **ON/OFF** is held down and Con x value is displayed, press **UNIT** 3 times. Then release the **ON/OFF** button. A "0000" password request will be displayed. Enter "9810" or “9788”password. When you press **TARE**, the numerical value will be increased; when you press **UNIT**, the decimal position is changed. To confirm the entered data, press **ON/OFF** button The integrated counter value will be displayed. Press **TARE** to confirm, "0^0" will be displayed.
CAL ⇩ 5000 g (example) 0	Put on a calibration weight (see chapter. 1 Technical data). Wait until the stabilisation indicator is displayed, press **TARE** to confirm. "CAL" will be displayed. The balance will switch to the weighing mode. Switch the balance off and then on again. Con value will be increased by "1". This means the calibration has been completed successfully.

English

8 Verification (FOB-LM models only)

General introduction:
According to EU directive 2014/31/EU balances must be officially verified if they are used as follows (legally controlled area):

a) For commercial transactions if the price of goods is determined by weighing.
b) For the production of medicines in pharmacies as well as for analyses in the medical and pharmaceutical laboratory.
c) For official purposes
d) For manufacturing final packages

In cases of doubt, please contact your local trade in standard.

Verification notes:
An EU type approval exists for balances described in their technical data as verifiable. If a balance is used where obligation to verify exists as described above, it must be verified and re-verified at regular intervals.
Re-verification of a balance is carried out according to the respective national regulations. The validity for verification of balances in Germany is e.g. 2 years.
The legal regulation of the country where the balance is used must be observed!

English

Verification of the balance is invalid without the seal.
The seal marks attached on balances with type approval point out that the balance may only be opened and serviced by trained and authorised specialist staff. If the seal mark is destroyed, verification looses its validity. Please observe all national laws and legal regulations. In Germany a re-verification will be necessary.

9 Operation

9.1 Simple weighing

Balance display	Operation
0 g	• Turn on balance by pressing the **ON/OFF** key. The balance will carry out a self-test. Await zero display
0 g	Should the balance not display exactly "**0**" despite unloaded weighing pan, press the **TARE** key. The balance returns to „**0**“
178 g (example)	• Place weighed items on balance. Wait until the stability display appears. Read weighing result.
	• To turn off the balance, press the **ON/OFF**-key shortly.

English

9.2 Taring

The dead weight of any weighing container may be tared away by pressing a button, so that the following weighing procedures show the net weight of the goods to be weighed.

Balance display	Operation
200 g (example)	• Deposit weighing container. The weight of the container is displayed.
0 g	⇨ Press the **TARE** button, the zero display disappears. The weight of the container is now internally saved.
178 g (Example FOB-N**S**) NET ▲ 325 g (Example FOB-N**L**)	⇨ Place weighed items in the weighing container. The net weight of the weighed items is displayed. For L models, a triangle appears below the NET symbol.

9.3 Switch-over weighing unit

According to the requirements the balance can be switched over into different units. These are set in the menu.
In the weighing mode, press the **UNIT** key to toggle to the selected weighing units.

- ➢ The available weighing units depend on the model and verification of the balance, see chap.1 "Technical data".
- ➢ When switching-on the balance, the unit in which the balance has been switched off, will be displayed.

English

9.4 Hold function (FOB, FOB-NL/-LM/ models only))

The balance has an integrated standstill function (mean value calculation).
With this it is possible to weigh unstable samples to be weighed exactly.
There are 2 possibilities:

Balance display	Operation
0 g	• Turn on balance by pressing the **ON/OFF** key. The balance will carry out a self-test. • Wait for „**0**“ display
Δ kg HoLd ▲ kg 5.233 (example)	⇨ Put the weighed item in place and press the **HOLD** key; "HOLD" will appear and a small triangle flashes. During this time, an average value is recorded. ⇨ The triangle will stop flashing, the stability display appears and the weight value obtained is displayed.
kg 5.233	⇨ By pressing the **HOLD** button several times, the balance returns to weighing mode. The triangle disappears.

9.5 Display background illumination (FOB, FOB-NL/-LM/ models only)

The balance has the ability to turn the backlight of the display on or off.

⇨ Press the **TARE** key for approx. 3 sec.

English

9.6 Weighing with tolerance range (FOB, FOB-LM models only)

You can set an upper or lower limit when weighing with tolerance range and thus ensure that the weighed load remains exactly within the set limits.

During tolerance tests such as dosing, portioning and sorting the unit will indicate exceeded or undershot limits by emitting an optical or acoustic signal.

Displayed triangle next to	Weight of the weighed item	Acoustic signal	Optical signal / background illumination of the display
✓	Target weight within tolerance range	2 short beeps	
-	Target weight below lower tolerance limit	no beep	
+	Target weight above upper tolerance limit If <***Err***> is displayed, the maximum load of the balance is exceeded.	perpetual tone	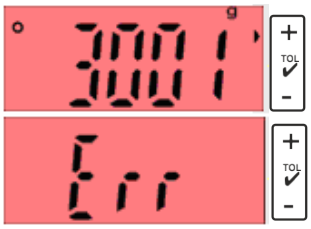

English

Call function:

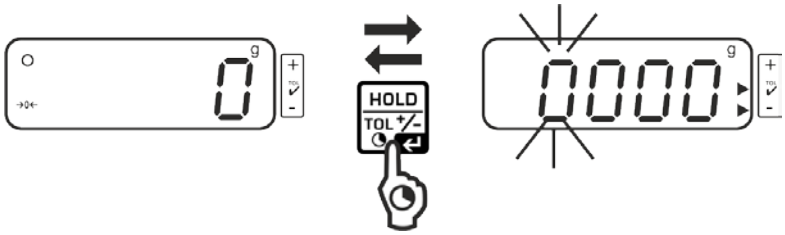

- Press and hold the **HOLD** key for three seconds in the weighing mode. The tolerance weighing mode is displayed.
  The display for entering the lower limit value appears, the first digit flashes. The lower tolerance mark ▶ is displayed.

Set limit values:

- To change the flashing digit, press the **TARE** button repeatedly until the desired value is displayed. Select the next digit with the **UNIT** key and set the value with the **TARE** key.

- Repeat process for each digit.

- Confirm entry with the **HOLD** key. The display for entering the upper limit value appears, the first digit flashes. The upper tolerance mark ▶ is displayed. The display lights red.

- To change the flashing digit, press the **TARE** button repeatedly until the desired value is displayed. Select the next digit with the **UNIT** key and set the value with the **TARE** key. Repeat process for each digit.

English

- Finish the input with the **HOLD**-key, from here, you can determine whether the weighed item is within the two tolerance limits.

Tolerance weighing

⇨ Tare when using a weighing container.

⇨ Put on goods to be weighed, tolerance control is started. The visual and acoustic signals indicate whether the weighed item is within the two tolerance limits.

Load below specified tolerance	Load within specified tolerance	Load exceeds specified tolerance
The tolerance mark ▶ next to "-" is displayed	The tolerance mark ▶ next to "✓" is displayed	The tolerance mark ▶ next to "+" is displayed

Return to weighing mode:

- Press and hold the **HOLD** key for three seconds to exit the tolerance weighing mode

English

10 Menu

10.1 Call up menu

Models FOB-S/-NS	• In weighing mode, hold down the TARE key until <SET> followed by <UNIT> is displayed.
Models FOB-NL/-LM	• Switch off the balance • Press and hold the **ON/OFF** key. Press the **TARE** key 3 times simultaneously, then release both keys. <SET> followed by <UNIT> is displayed.
Models FOB	• Switch off the balance. • Press the **ON/OFF** and **TARE** buttons simultaneously and for approx. 3 s until <SET> is displayed, then release both keys.
Models FOB-LM	• In the weighing mode press and hold **UNIT** button until <SET> and then <Aoff> is displayed.

English

10.2 Navigation in the menu

All models (except FOB):

Button	Navigation	Description
TARE-key	↓	• Passing through menu items from top to bottom • Confirm selection
UNIT-button	→	• Passing through menu items from left to right

Models FOB:

Button	Navigation		Description
UNIT-button	↓	→	• Passing through menu items from left to right
TARE-key			• Confirm selection

10.3 Exit menu / return to weighing mode

⇨ Select menu item <**END**> and confirm with the **TARE** key.

10.4 Menu overview

10.4.1 Models FOB-S

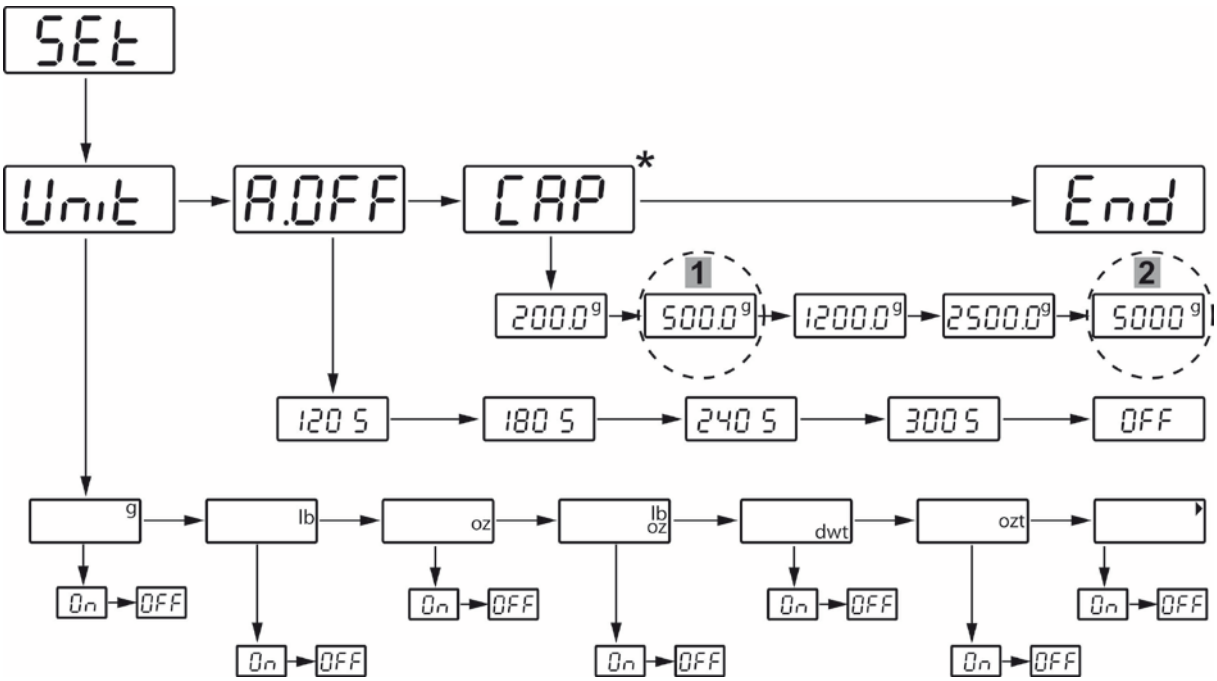

*Preset values may only be modified by trained and specialized personnel.

1	Model FOB 500-1S
2	Model FOB 5K1S

10.4.2 Models FOB-NS

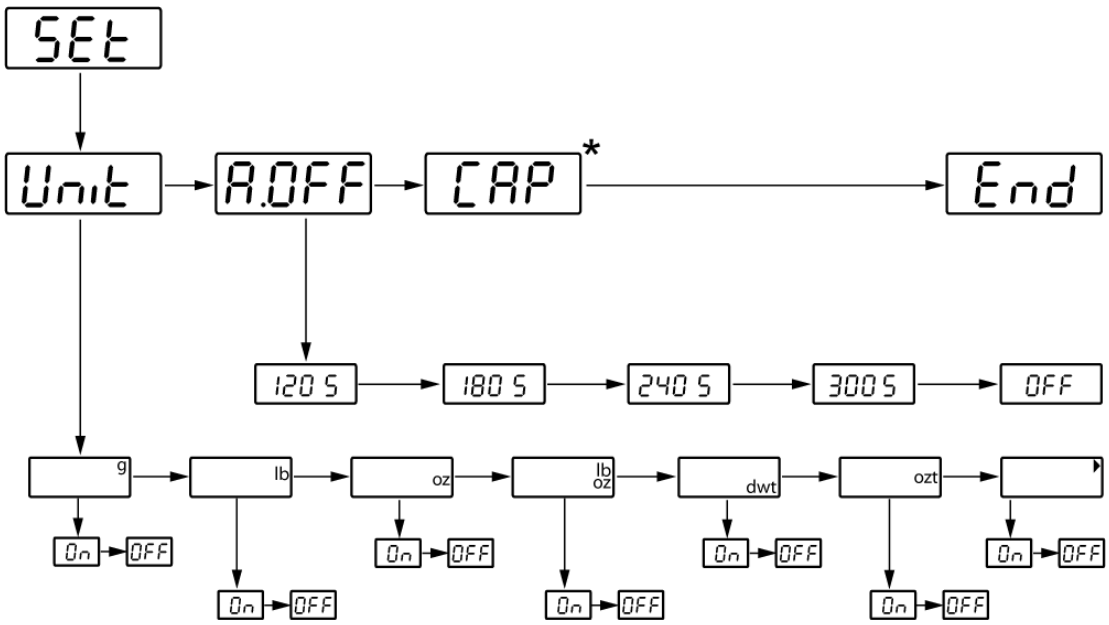

*not documented

English

10.4.3 Models FOB-NL

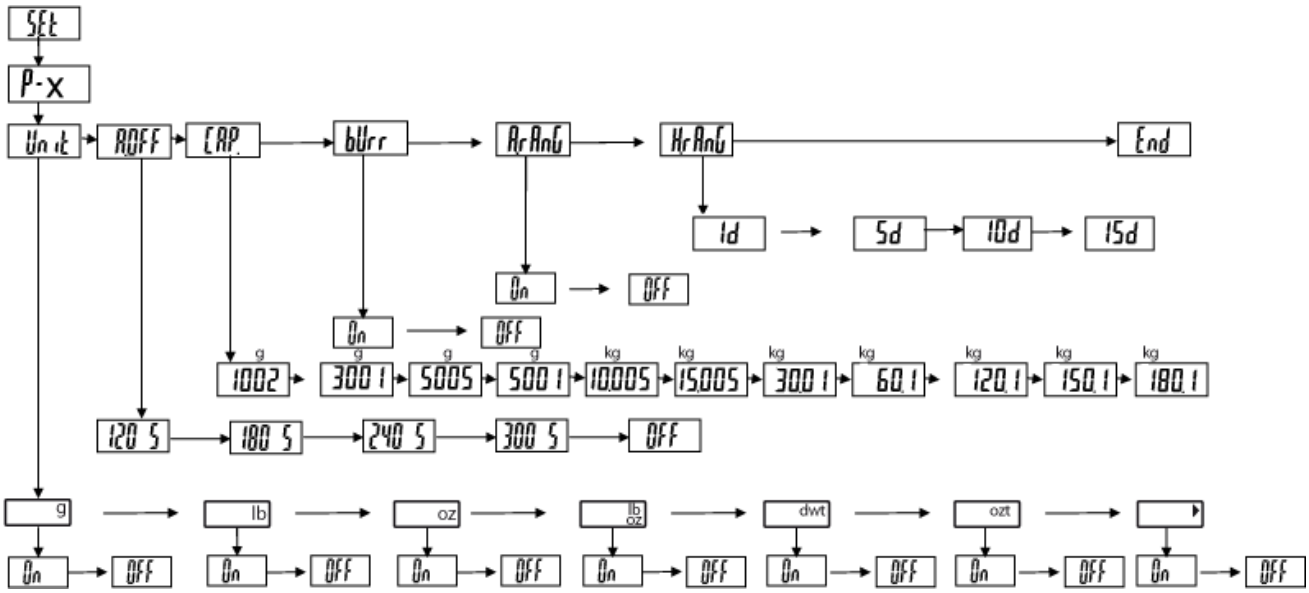

10.4.4 Models FOB-LM

Verified:

i	Menu items relevant for verification are not available for verified balances.

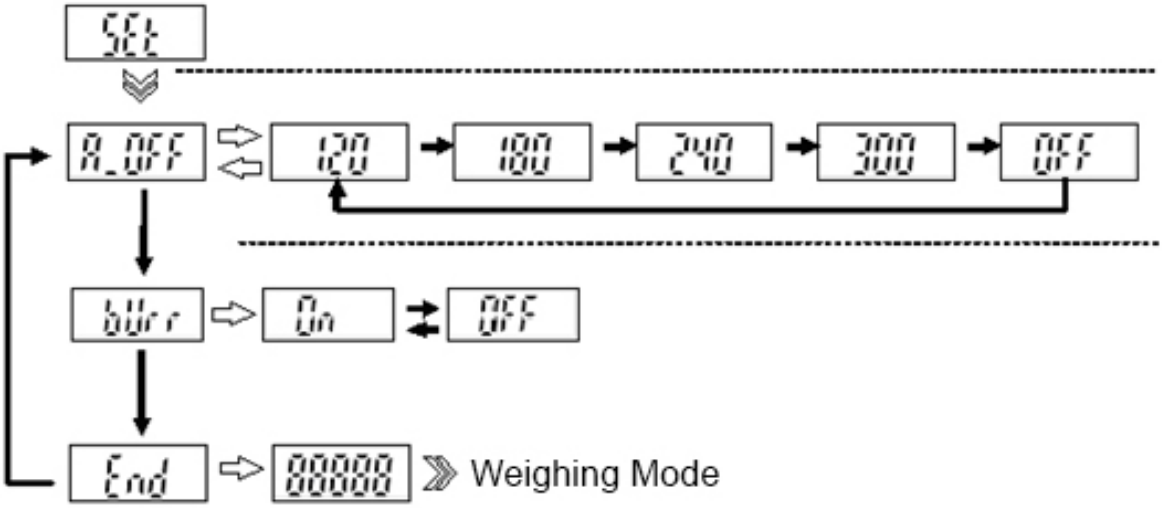

English

Not verified:

ℹ	On non-verified balances, the contacts on the PCB must be short-circuited with a jumper. All menu items are available.

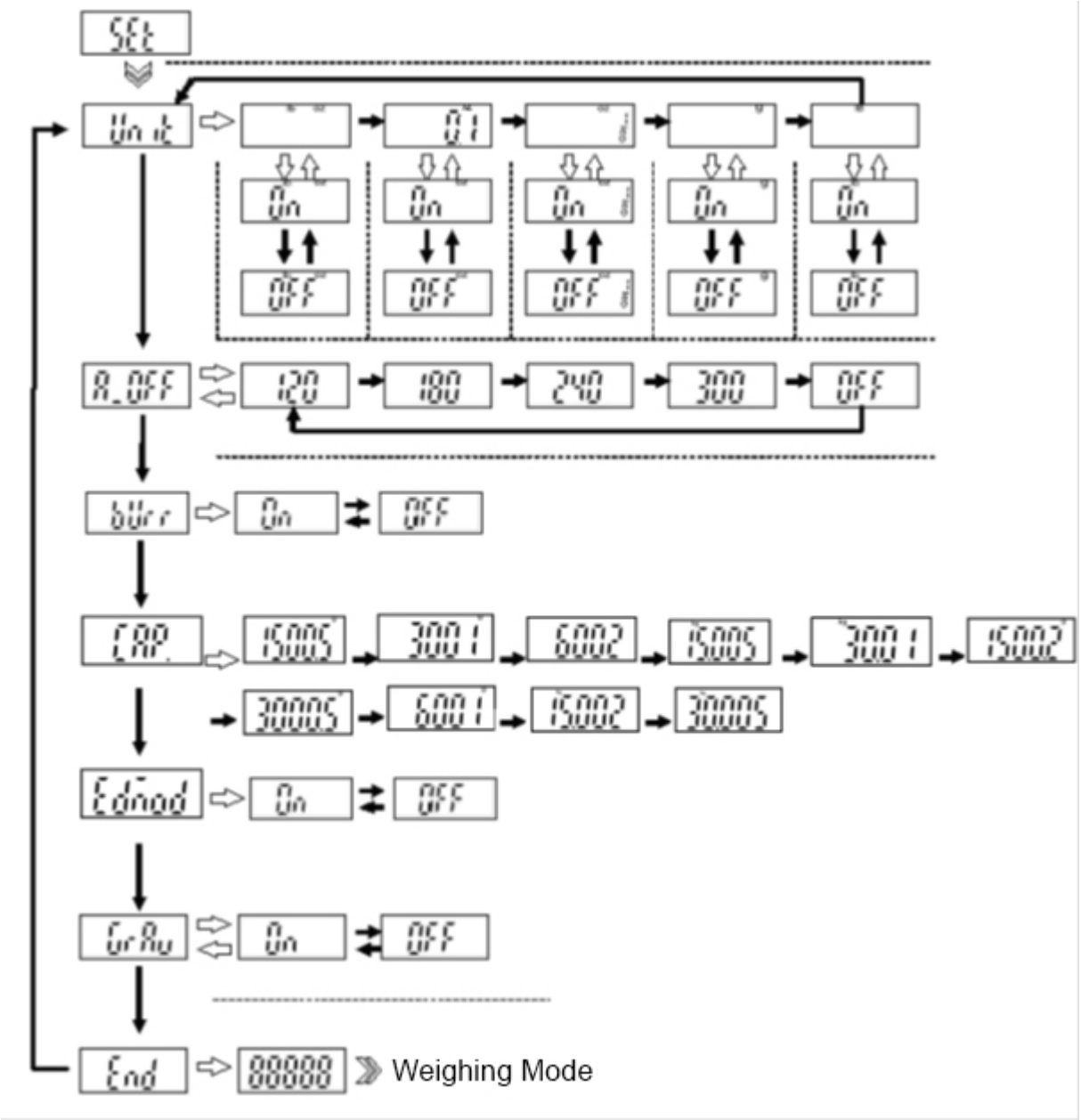

English

10.4.5 Models FOB

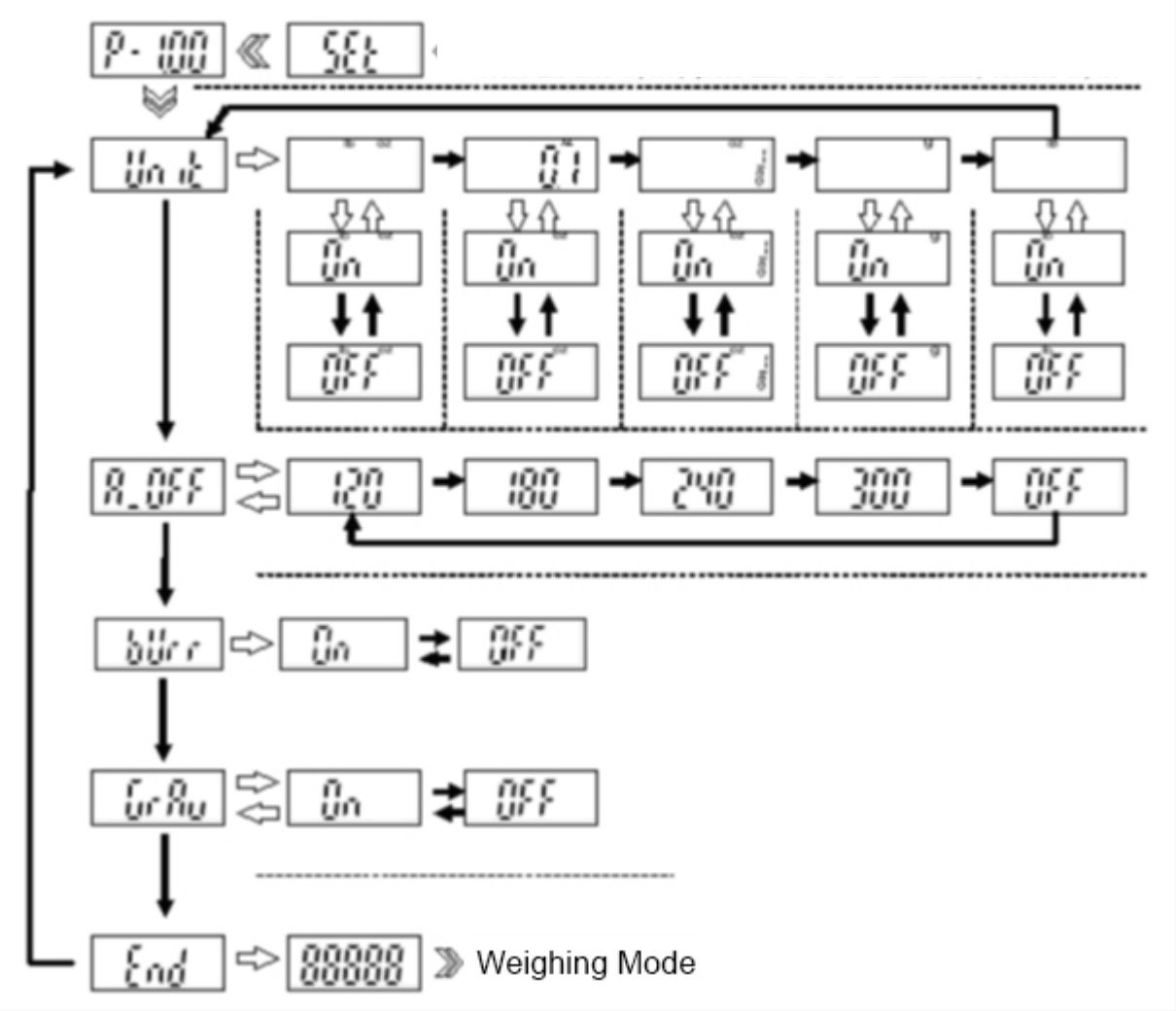

English

10.5 Menu settings

10.5.1 Setting weighing units

Balance display	Operation
SEt ò Unit	**FOB-S / FOB-NS:** • In weighing mode, press and hold the **TARE** button for approx. 3 seconds. „SEt“, followed by „Unit“ is displayed **FOB-NL:** • Switch off the balance Press and hold the **ON/OFF** key and simultaneously press the **TARE** key 3 times and then release both keys.
g	⇨ Press the **TARE** key again, the weighing unit "g" is displayed
oz (example)	• Use UNIT to change to the desired unit
OFF oz	• Press the **TARE** key, "OFF" is displayed
On oz (example)	• Press the **UNIT** key to change to "On
oz (example)	• Press the **TARE** key, the selected unit will be displayed thus being set.

English

Unit	• Press the **UNIT** key until "Unit" is displayed
AOFF	• Press the **UNIT** key, "A.Off" is displayed
CAP	• Press the **UNIT** key, "CAP." is displayed
End	• Press the **UNIT** key, "End" is displayed
0 0 g	• Press the **TARE** key, to return to the weighing mode.
	• Switch between the set units using the **UNIT** key

ℹ	In order to switch off the units display, proceed as described above and set the selected unit to „Off“.

English

10.5.2 Automatic switch-off function „AUTO OFF“ in stand-by mode

The balance offers the possibility of the automatic switch-off, when the balance is in stand-by mode. The switch-off time may be selected as follows:

Balance display	Operation
SEt ò Unit	**FOB-S / FOB-NS:** • In weighing mode, press and hold the **TARE** button for approx. 3 seconds. „SEt“, followed by „Unit“ is displayed **FOB-NL:** • Switch off the balance • Press and hold the **ON/OFF** key and simultaneously press the **TARE** key 3 times and then release both keys.
AOFF	⇨ Press the **UNIT** key, "AOFF" is displayed
120 S ò 180 S ò 240 S ò 300 S ò OFF	• Press the **TARE**-key, current setting appears. • Press the **UNIT** key to select the desired setting: 120s = Auto off after 120 seconds 180s = Auto off after 180 seconds 240s = Auto off after 240 seconds 300s = Auto off after 300 seconds OFF = Auto off switched off

English

AOFF	• Press the **TARE** key to confirm your selection, "AOFF" is displayed
CAP	• Press the **UNIT** key, "CAP" is displayed
End	• Press the **UNIT** key again, "End" is displayed
0 0.0 g	• To return to weighing mode, press the **TARE**- key. The setting is saved.

i	The auto-off function is only possible in battery operation. This function is deactivated during mains operation.

English

11 Error reports

LobAt	Battery empty	Insert new batteries or connect the balance to the power supply using the AC adapter.
Err - - - - -	Overload - The weight on the weighing platform exceeds the capacity of the balance.	Reduce load
ErrL - - - - -	Underload	Increase the load, if the error message remains, please contact your retailer
00000	Zero range when switching on	Check that the weighing pan is correctly seated
00000	Zero setting range exceeded at switch-on	Remove objects from the weighing pan
ErrE	Software error	Contact your retailer

English

12 Servicing, maintenance, disposal

12.1 Cleaning

Before cleaning, please disconnect the appliance from the operating voltage.

- ⇨ Clean the stainless-steel parts with a soft cloth soaked with a cleaning agent suitable for stainless steel.
- ⇨ For stainless steel parts do not use any cleaning agents which contain sodium hydroxide solution, acetic, hydrochloric, sulphuric or citric acid.
- ⇨ Do not use metal brushes or cleaning sponges of steel wool, as this causes superficial corrosion.

Spilled weighing goods must be removed immediately.

12.2 Servicing, maintenance

The appliance may only be opened by trained service technicians who are authorized by KERN.
Before opening, disconnect from power supply.

12.3 Disposal

Disposal of packaging and appliance must be carried out by operator according to valid national or regional law of the location where the appliance is used.

English

13 Instant help

In case of an error in the program process, briefly turn off the balance and disconnect from power supply. The weighing process must then be restarted from the beginning.

Help:

Fault	Possible cause
The displayed weight does not glow.	• The balance is not switched on. • The mains supply connection has been interrupted (mains cable not plugged in/faulty). • Power supply interrupted. • (Rechargeable) batteries are inserted incorrectly or empty • No (rechargeable) batteries inserted.
The displayed weight is permanently changing	• Draught/air movement • Table/floor vibrations • Weighing pan has contact with other objects. • Electromagnetic fields / static charging (choose different location/switch off interfering device if possible)
The weighing result is obviously incorrect	• The display of the balance is not at zero • Adjustment is no longer correct. • Great fluctuations in temperature. • Warm-up time was ignored. • Electromagnetic fields / static charging (choose different location/switch off interfering device if possible)

Should other error messages occur, switch balance off and then on again. If the error message remains inform manufacturer.

English